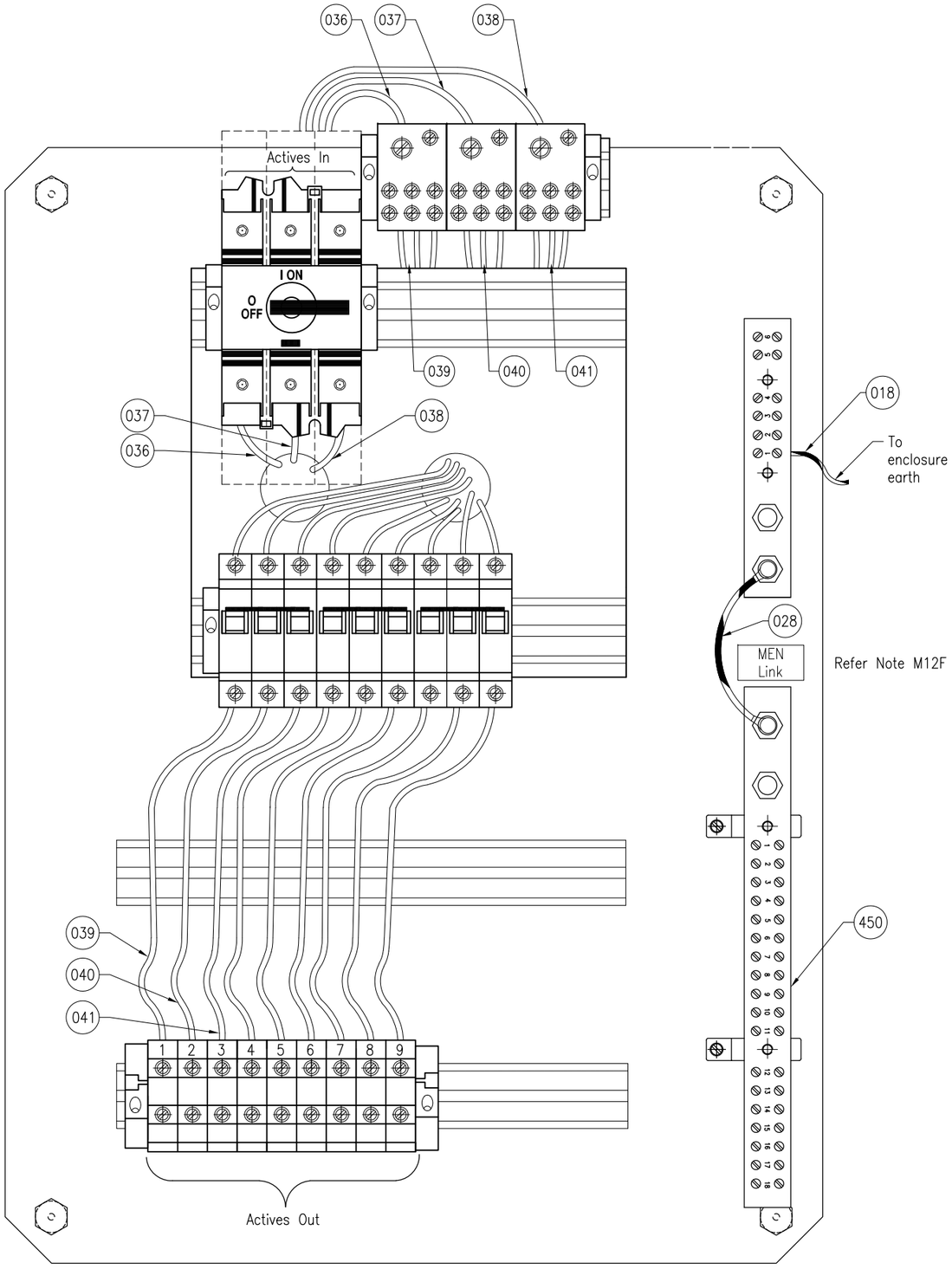

SWITCHBOARD WIRING LAYOUT
WITHOUT PHOTOELECTRIC CELL CONTROL

MATERIAL NOTES:

M1. Mounting plate : 2mm stainless steel 316
M2. Main Switch and Fuse switches Mount : 1.5mm stainless steel 316
M3. Enclosure : 1.5mm stainless steel 316, orbital finish
M4. Escutcheon : 2mm stainless steel 316
M5. Door seal : Polyurethane Gasket Foamed In place
M6. Switchboard Gasket : 3mm thick UV stabilised polyurethane
M7. Hinges : Chrome Plated Brass Pintle Hinge
M8. Gland plate : 5mm thick Aluminium
M9. Gland plate Gasket : 3mm thick UV stabilised polyurethane
M10. Enclosure Rating : IP55
M11. Din Rail TS35–7.5 passivated steel
M12. Labels

ID	Description	Colour	Font
A	DANGER 415 VOLTS	White Traffolyte with red letters	5mm Arial font
B	MAIN SWITCH	White Traffolyte with black letters	5mm Arial font
C	WARNING – MAIN SWITCH IS NOT INTERLOCKED TO DOOR	White Traffolyte with red letters	5mm Arial font
~~D~~	~~LIGHTING CONTACTORS BEHIND~~	~~White Traffolyte with black letters~~	~~5mm Arial font~~
E	MEN LINK BEHIND	White Traffolyte with black letters	5mm Arial font
F	MEN LINK	White Traffolyte with black letters	5mm Arial font
G	EARTH ELECTRODE IN ADJACENT EARTH PIT	White Traffolyte with black letters	5mm Arial font
H	(other labels)	White Traffolyte with black letters	3mm Arial font

NOTES:

1. Dimensions are in millimetres unless shown otherwise.

ASSOCIATED DEPARTMENTAL DOCUMENTS:
Standard Drawings
Specifications
Traffic and Road Use Management Manual (TRUM)
– Volume 4 Part 3 Electrical Design for Roadside Devices

REFERENCED DOCUMENTS:
Departmental Standard Drawings:
1623 Road Lighting – Switchboard Typical Layout and Circuit Diagram MEN System
1627 Road Lighting – Switchboard Top Mounted
1628 Road Lighting – Post – Top Mounted Switchboard
1699 Traffic Signals/Road Lighting/ITS – Parts List

Departmental Standard Specifications:
MRTS210 Provision of Mains Power
MRTS228 Electrical Switchboards
MRTS256 Power Cables

Australian Standards:
AS/NZS 3000 Electrical Installations (Wiring Rules)

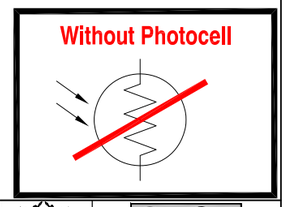

Department of Transport and Main Roads

ROAD LIGHTING

SWITCHBOARD
ASSEMBLY DETAILS

SHEET 1 OF 6

Queensland Government

©The State of Queensland (Department of Transport and Main Roads) 2021
http://creativecommons.org/licenses/by/4.0/

A3
Not to Scale

Standard Drawing No
1686
Date 3/2021

A B C D

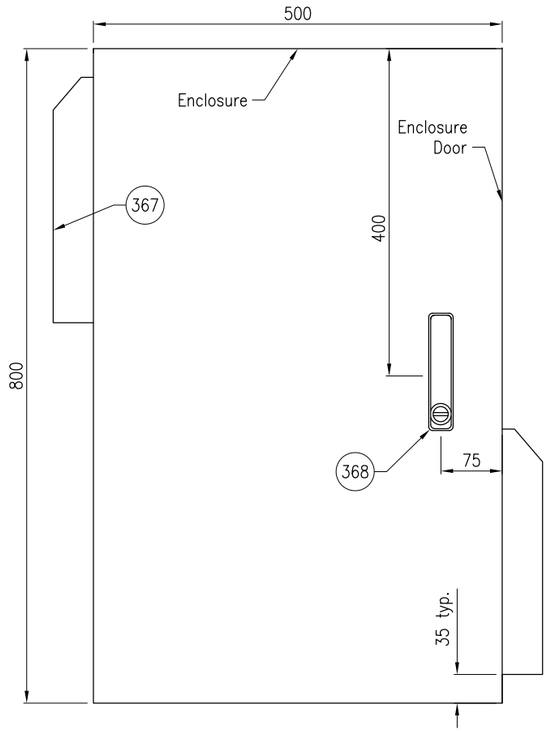

FRONT VIEW
DOOR LAYOUT

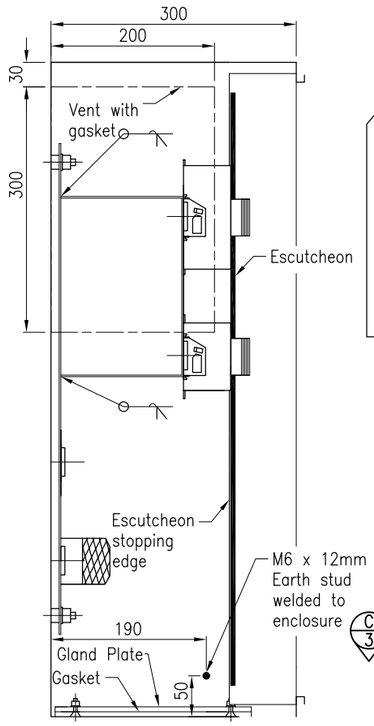

SECTION A

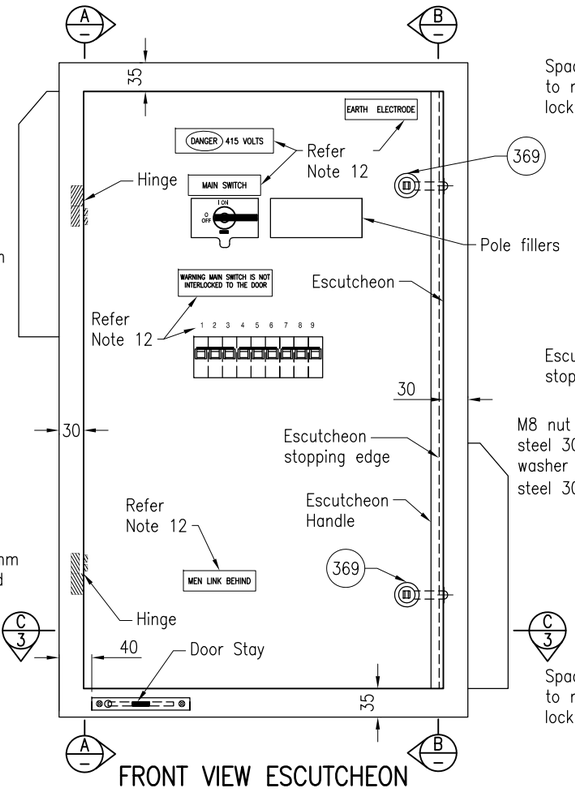

FRONT VIEW ESCUTCHEON
DOOR REMOVED

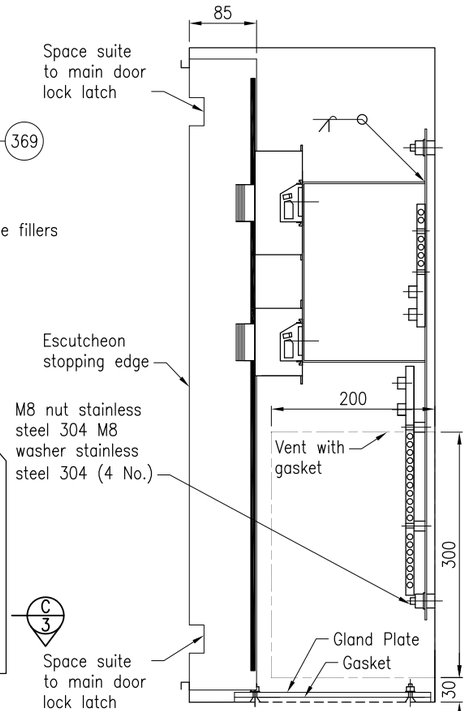

SECTION B

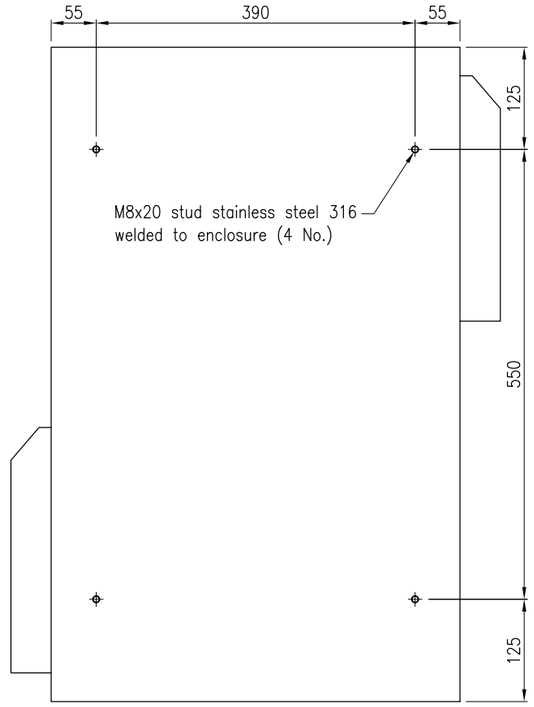

INSIDE BACK OF ENCLOSURE

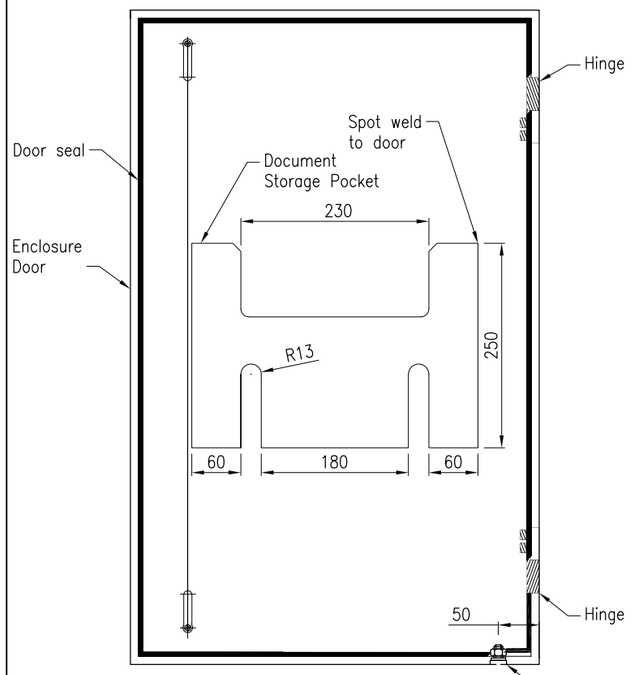

REAR VIEW DOOR LAYOUT

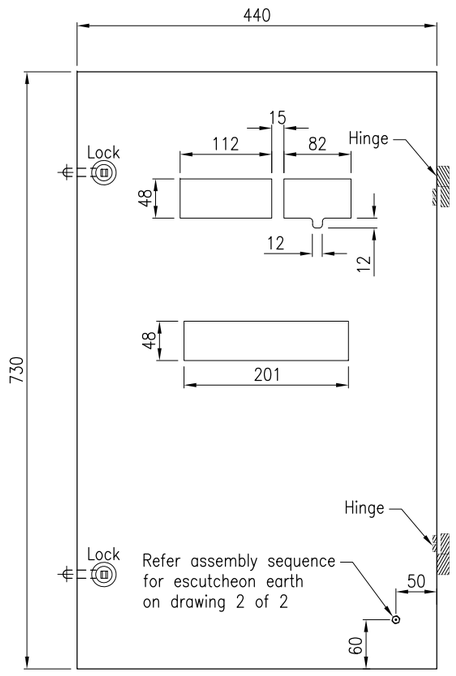

REAR VIEW ESCUTCHEON

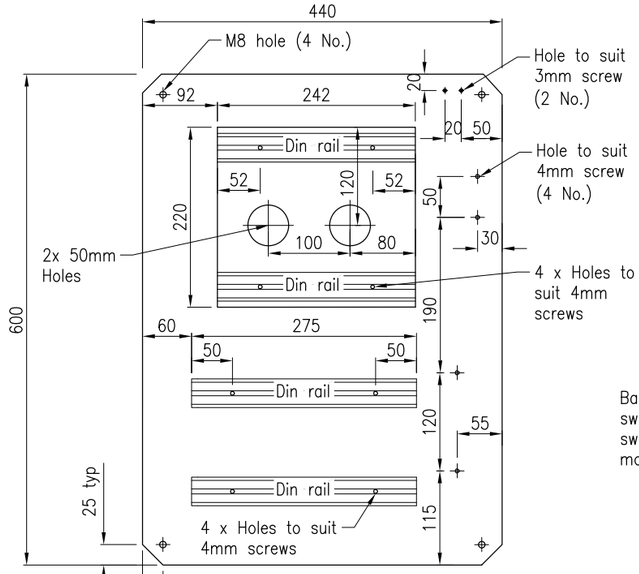

FRONT VIEW
MOUNTING PLATE

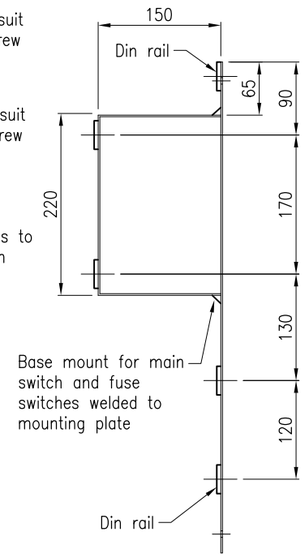

SIDE VIEW MOUNTING PLATE

SWITCHBOARD ASSEMBLY DETAILS WITHOUT PHOTOELECTRIC CELL CONTROL

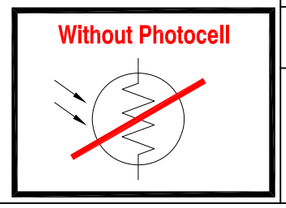

Department of Transport and Main Roads

ROAD LIGHTING

SWITCHBOARD
ASSEMBLY DETAILS

SHEET 2 OF 6

Queensland Government

© The State of Queensland (Department of Transport and Main Roads) 2021
http://creativecommons.org/licenses/by/4.0/

A3

Not to Scale

Standard Drawing No
1686
Date 3/2021

A | B | C | D

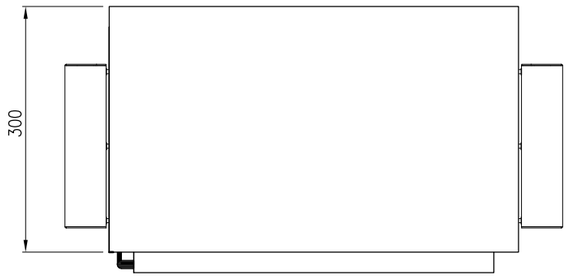

TOP VIEW OF ENCLOSURE

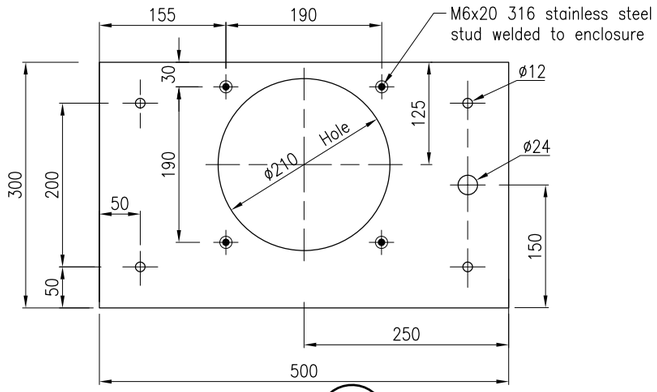

SECTION C/2
WITHOUT GLAND PLATE

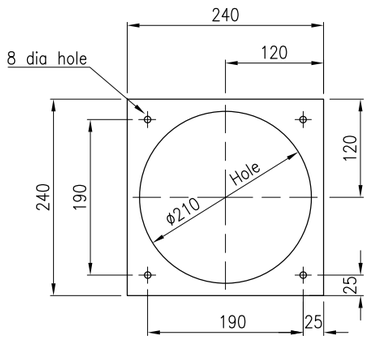

GLAND PLATE GASKET

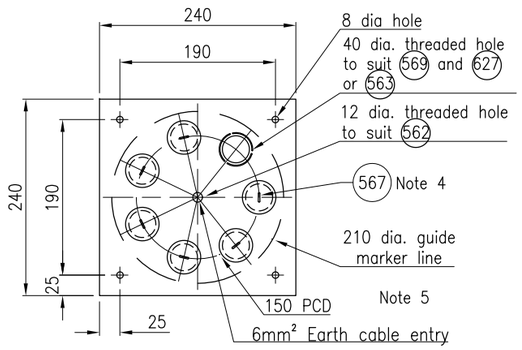

GLAND PLATE

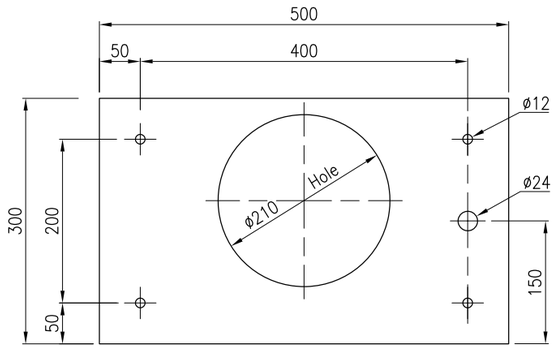

SWITCHBOARD GASKET

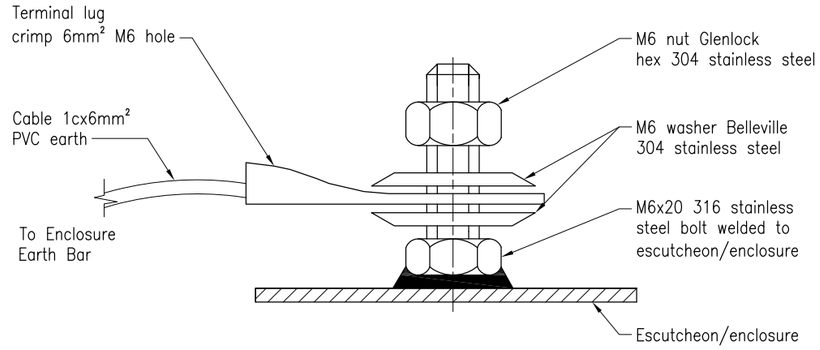

ASSEMBLY SEQUENCE FOR ESCUTCHEON/ENCLOSURE EARTH

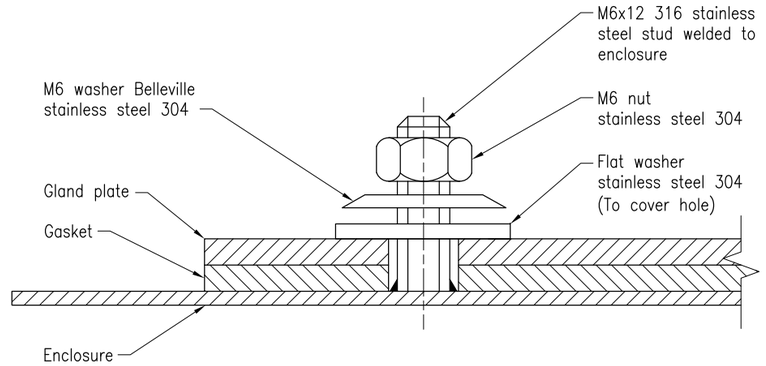

FIXING OF GLAND PLATE

~~PE~~ NOTES:

~~1. Tension the brass nut to 13-14Nm after all parts of mount are assembled.~~

~~2. Screw photocell (part 545 = standard drawing 1699) into PE cell mount until snug and the inner o-ring is compressed sufficiently to be water-tight.~~

3. Dimensions are in millimetres unless shown otherwise.
4. All Cable entry points to be capped.
5. Contractor to ensure correct glands/reducers are ordered from switchboard suppliers.

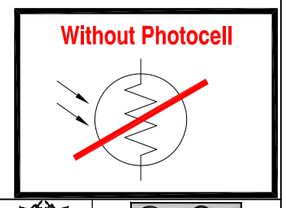

SWITCHBOARD ASSEMBLY DETAILS WITHOUT PHOTOELECTRIC CELL CONTROL

Department of Transport and Main Roads	
ROAD LIGHTING	
SWITCHBOARD ASSEMBLY DETAILS	
SHEET 3 OF 6	

Queensland Government

© The State of Queensland (Department of Transport and Main Roads) 2021 http://creativecommons.org/licenses/by/4.0/

A3 | Not to Scale | Standard Drawing No 1686 | Date 3/2021

A | B | C | D

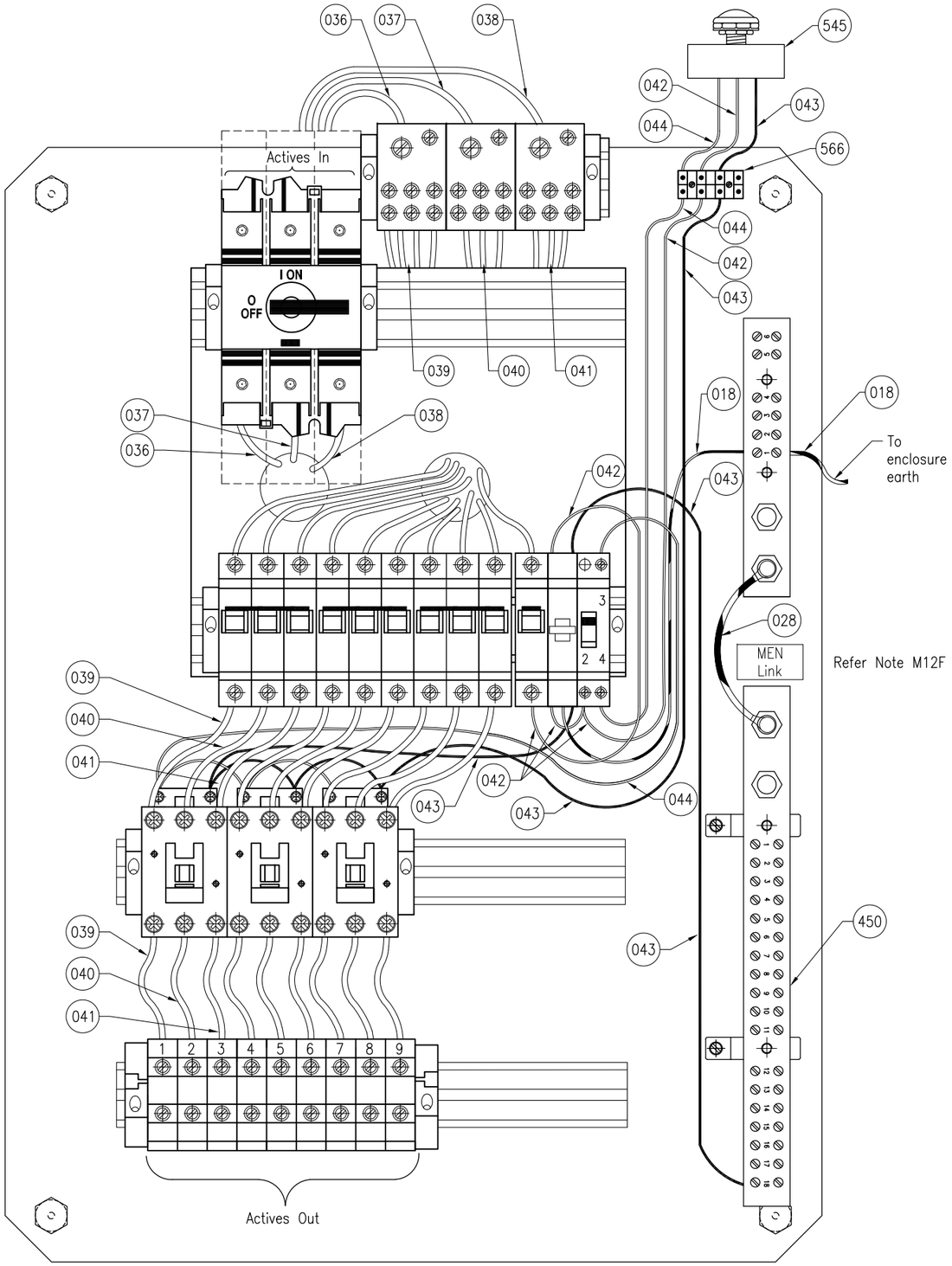

SWITCHBOARD WIRING LAYOUT
WITH PHOTOELECTRIC CELL CONTROL

MATERIAL NOTES:

M1. Mounting plate : 2mm stainless steel 316
M2. Main Switch and Fuse switches Mount : 1.5mm stainless steel 316
M3. Enclosure : 1.5mm stainless steel 316, orbital finish
M4. Escutcheon : 2mm stainless steel 316
M5. Door seal : Polyurethane Gasket Foamed In place
M6. Switchboard Gasket : 3mm thick UV stabilised polyurethane
M7. Hinges : Chrome Plated Brass Pintle Hinge
M8. Gland plate : 5mm thick Aluminium
M9. Gland plate Gasket : 3mm thick UV stabilised polyurethane
M10. Enclosure Rating : IP55
M11. Din Rail TS35–7.5 passivated steel
M12. Labels

ID	Description	Colour	Font
A	DANGER 415 VOLTS	White Traffolyte with red letters	5mm Arial font
B	MAIN SWITCH	White Traffolyte with black letters	5mm Arial font
C	WARNING – MAIN SWITCH IS NOT INTERLOCKED TO DOOR	White Traffolyte with red letters	5mm Arial font
D	LIGHTING CONTACTORS BEHIND	White Traffolyte with black letters	5mm Arial font
E	MEN LINK BEHIND	White Traffolyte with black letters	5mm Arial font
F	MEN LINK	White Traffolyte with black letters	5mm Arial font
G	EARTH ELECTRODE IN ADJACENT EARTH PIT	White Traffolyte with black letters	5mm Arial font
H	(other labels)	White Traffolyte with black letters	3mm Arial font

NOTES:

1. Dimensions are in millimetres unless shown otherwise.

ASSOCIATED DEPARTMENTAL DOCUMENTS:
Standard Drawings
Specifications
Traffic and Road Use Management Manual (TRUM)
– Volume 4 Part 3 Electrical Design for Roadside Devices

REFERENCED DOCUMENTS:
Departmental Standard Drawings:
1623 Road Lighting – Switchboard Typical Layout and Circuit Diagram MEN System
1627 Road Lighting – Switchboard Top Mounted
1628 Road Lighting – Post – Top Mounted Switchboard
1699 Traffic Signals/Road Lighting/ITS – Parts List

Departmental Standard Specifications:
MRTS210 Provision of Mains Power
MRTS228 Electrical Switchboards
MRTS256 Power Cables

Australian Standards:
AS/NZS 3000 Electrical Installations (Wiring Rules)

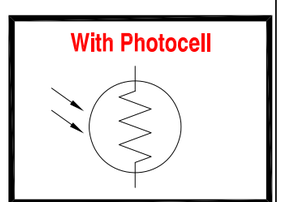

Department of Transport and Main Roads

ROAD LIGHTING

SWITCHBOARD
ASSEMBLY DETAILS

SHEET 4 OF 6

Queensland Government

© The State of Queensland (Department of Transport and Main Roads) 2021
http://creativecommons.org/licenses/by/4.0/

A3
Not to Scale

Standard Drawing No
1686
Date 3/2021

A B C D

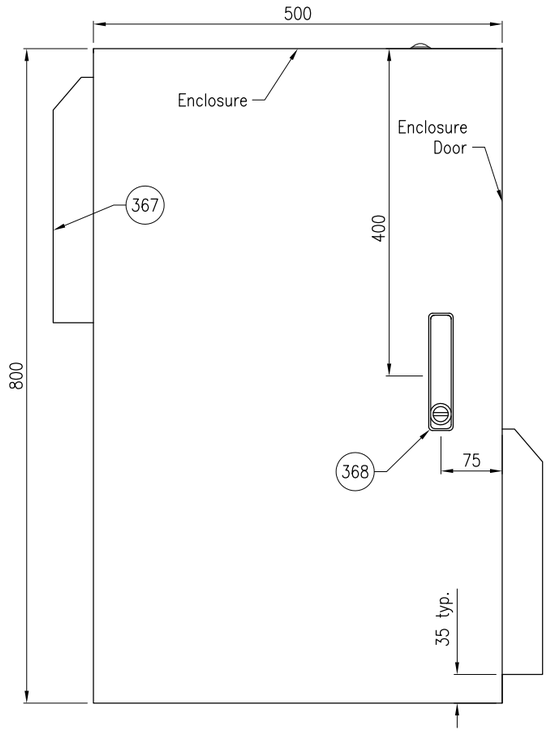

FRONT VIEW
DOOR LAYOUT

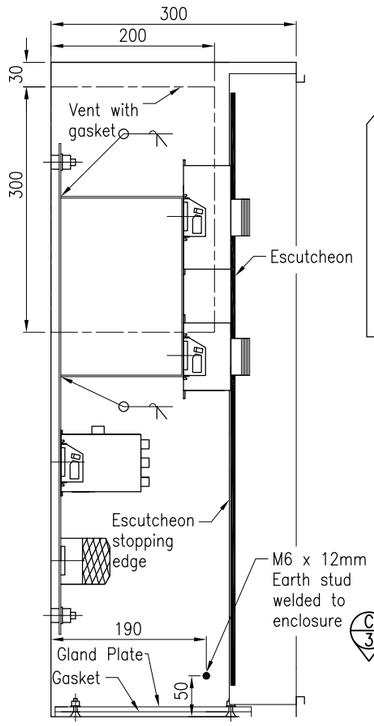

SECTION A

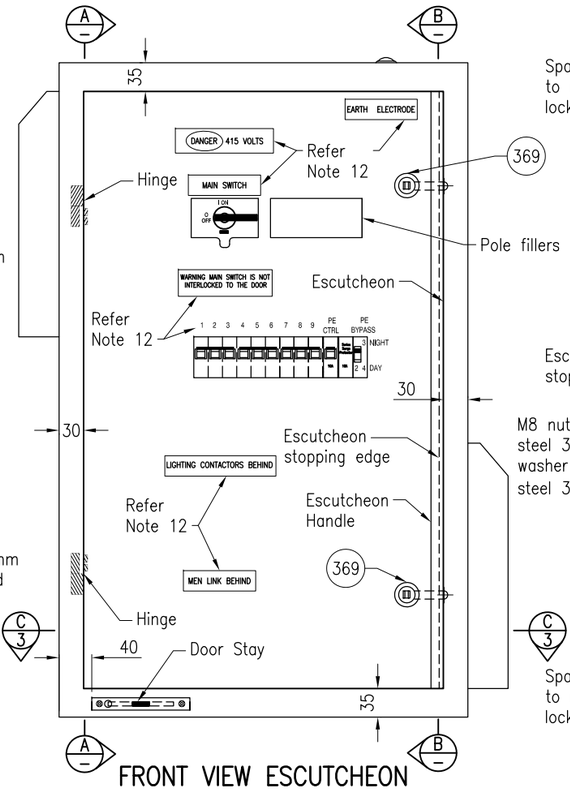

FRONT VIEW ESCUTCHEON
DOOR REMOVED

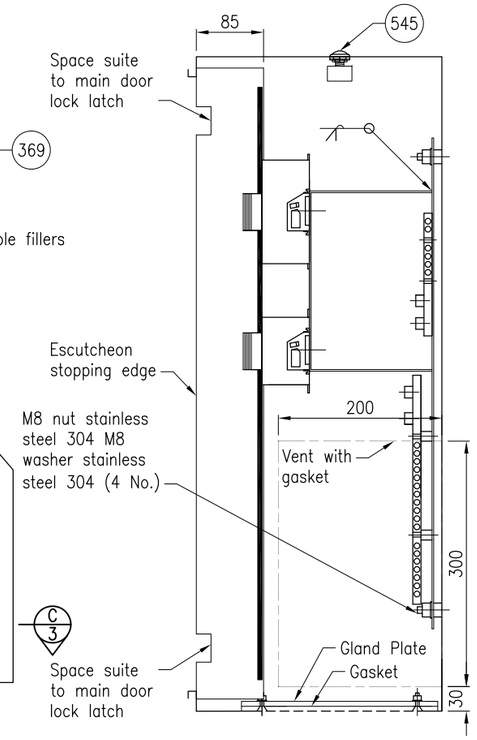

SECTION B

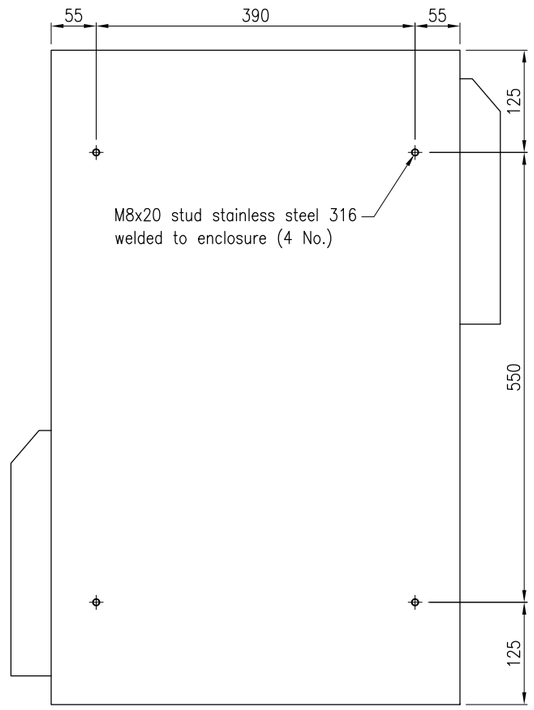

INSIDE BACK OF ENCLOSURE

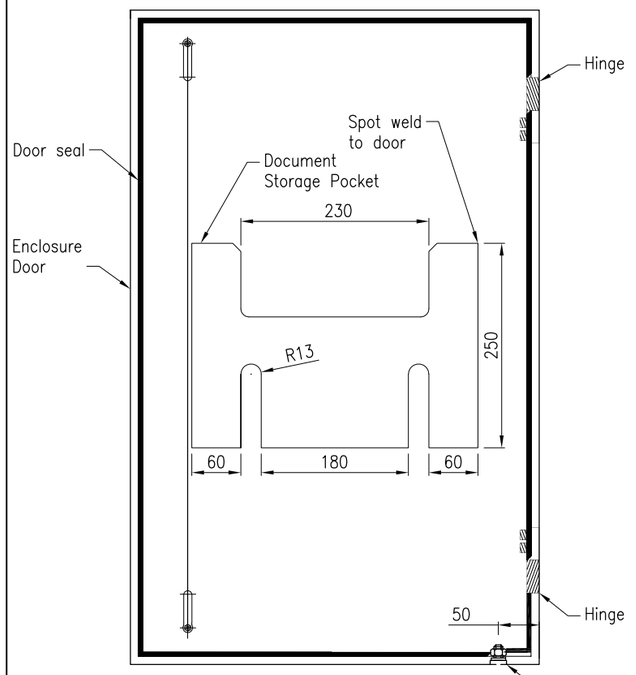

REAR VIEW DOOR LAYOUT

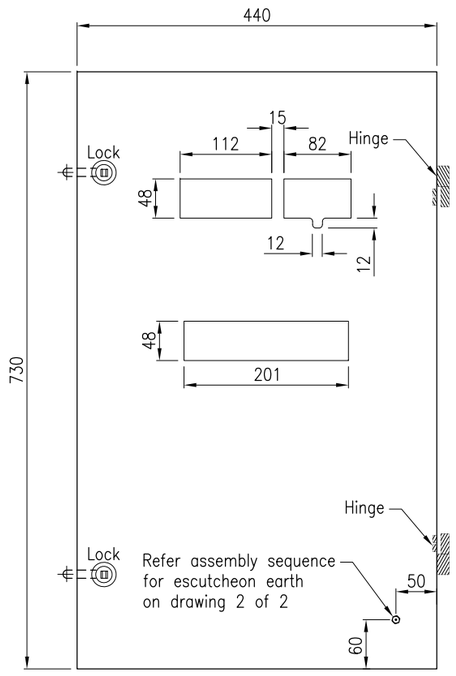

REAR VIEW ESCUTCHEON

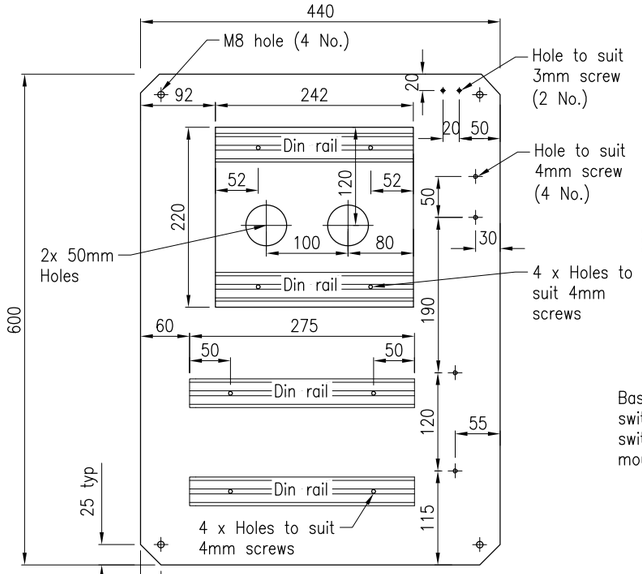

FRONT VIEW
MOUNTING PLATE

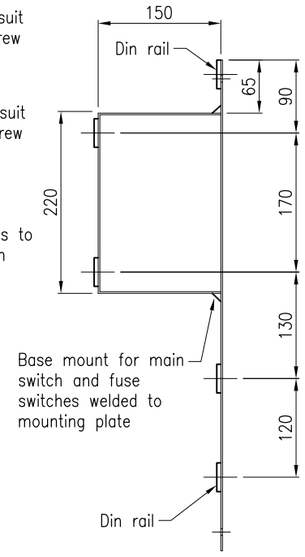

SIDE VIEW MOUNTING PLATE

SWITCHBOARD ASSEMBLY DETAILS WITH PHOTOELECTRIC CELL CONTROL

With Photocell

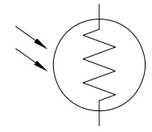

Department of Transport and Main Roads

ROAD LIGHTING

SWITCHBOARD
ASSEMBLY DETAILS

SHEET 5 OF 6

Queensland Government

© The State of Queensland (Department of Transport and Main Roads) 2021
http://creativecommons.org/licenses/by/4.0/

A3

Not to Scale

Standard Drawing No
1686
Date 3/2021

A | B | C | D

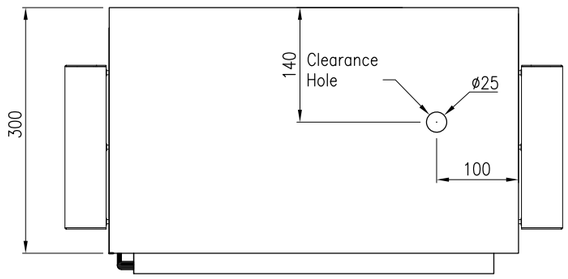

TOP VIEW OF ENCLOSURE

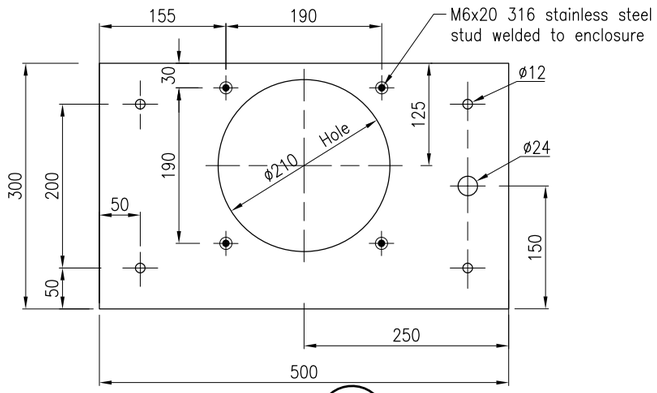

SECTION C/2
WITHOUT GLAND PLATE

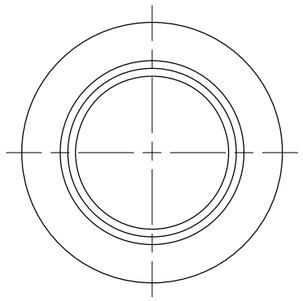

TOP VIEW

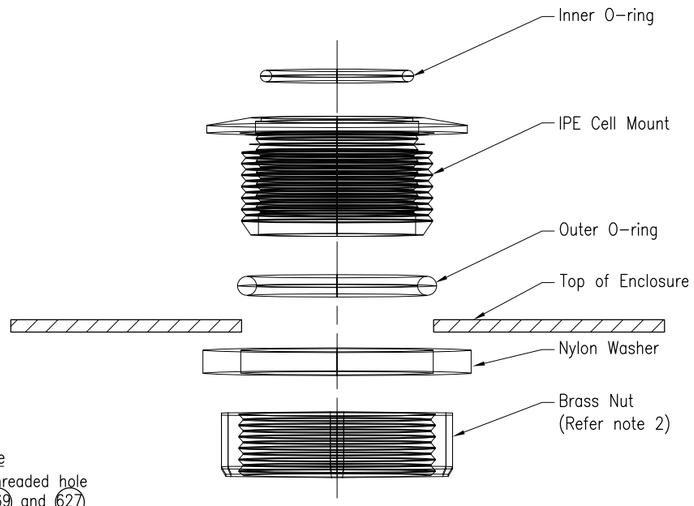

FRONT VIEW

ASSEMBLY SEQUENCE FOR PHOTO ELECTRIC (PE) CELL MOUNT (557)

(Refer Notes 1 and 2)

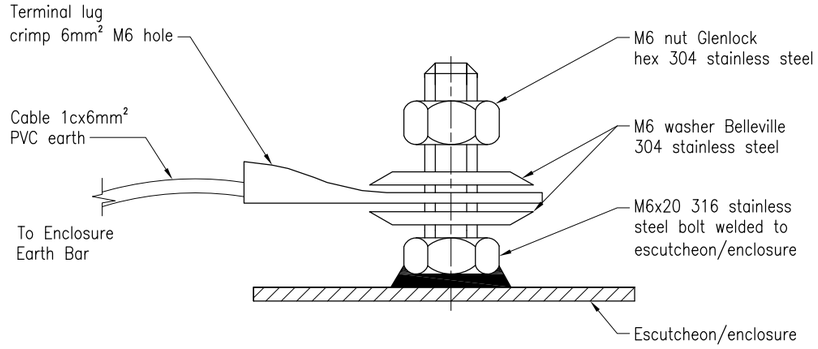

ASSEMBLY SEQUENCE FOR ESCUTCHEON/ENCLOSURE EARTH

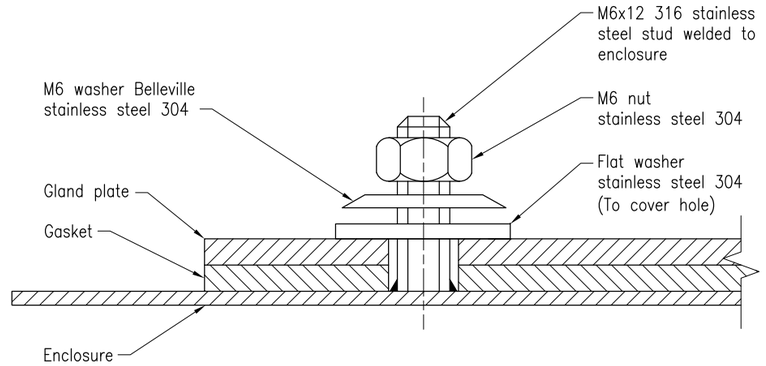

FIXING OF GLAND PLATE

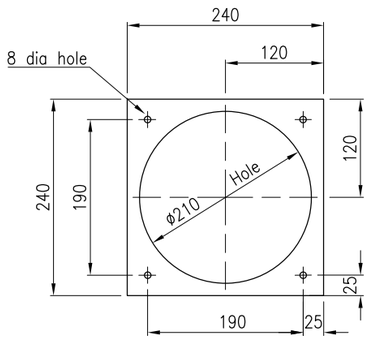

GLAND PLATE GASKET

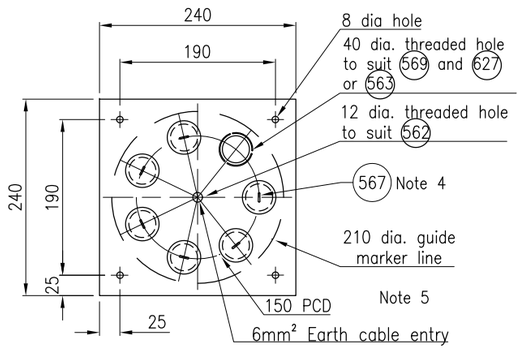

GLAND PLATE

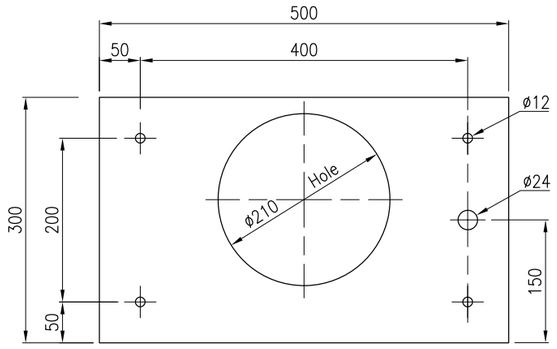

SWITCHBOARD GASKET

PE NOTES:

1. Tension the brass nut to 13–14Nm after all parts of mount are assembled.
2. Screw photocell (part 545 – standard drawing 1699) into PE cell mount until snug and the inner o-ring is compressed sufficiently to be water tight.
3. Dimensions are in millimetres unless shown otherwise.
4. All Cable entry points to be capped.
5. Contractor to ensure correct glands/reducers are ordered from switchboard suppliers.

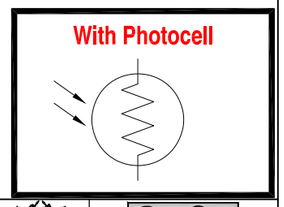

SWITCHBOARD ASSEMBLY DETAILS WITH PHOTOELECTRIC CELL CONTROL

Department of Transport and Main Roads	
ROAD LIGHTING	
SWITCHBOARD ASSEMBLY DETAILS	
SHEET 6 OF 6	

Queensland Government

©The State of Queensland (Department of Transport and Main Roads) 2021
http://creativecommons.org/licenses/by/4.0/

A3 | Not to Scale | Standard Drawing No 1686 | Date 3/2021

A | B | C | D