Eton Range Realignment Project

ATTACHMENT 1 to EPBC Ref: 2015/7552 Preliminary Documentation
Fauna Management Plan – Koala

December 2015

Queensland Government

Contents

Table of Figures

Table of Tables

Glossary

Term	Description
CQU	Central Queensland University
DAF	Department of Agriculture and Fisheries
DEHP	Department of Environment and Heritage Protection
DERM (former)	Department of Environment and Resource Management
DNRM	Department of Natural Resources and Mines
DoE	Department of the Environment
EMP(C)	Environment Management Plan (Construction)
EPBC Act	*Environment Protection and Biodiversity Conservation Act 1999*
FMP	Fauna Management Plan (Koala)
FRW	Fauna Rescue Whitsunday
KSAT	Koala Spot Assessment Technique
MNES	Matters of National Environmental Significance
NC Act	*Nature Conservation Act 1992*
NRM	Department of Natural Resources and Mines
QPWS	Queensland Parks and Wildlife Service
RE	Regional Ecosystem
REF	Review of Environmental Factors
RFI	Request for Information
RIA	Residual Impact Assessment and Offset Proposal
SPRAT	Species Profile and Threats Database
TMR	Department of Transport and Main Roads
VMA	*Vegetation Management Act 1999*

1. Introduction

1.1 Purpose

This Fauna Management Plan - Koala (FMP) has been prepared by the Department of Transport and Main Roads (TMR) in response to a Request For Information (RFI) received from the Department of Environment (DoE) for the Eton Range Realignment Project (the 'Project') - *Environment Protection and Biodiversity Conservation Act 1999* (EPBC Act) referral reference: EPBC 2015/7552.

The Project has been assessed as having the potential to have a significant impact on the Koala (*Phascolarctos cinereus*), a Matter of National Environmental Significance (MNES) under the EPBC Act.

Item 3.1 of the RFI (*Proposed Avoidance, Management and Mitigation Measures*) required TMR to revise the Species Management Program - Koala (SMP), which was submitted with the referral documentation to the DoE.

This FMP outlines TMR's commitment to the management and mitigation of impacts, to minimise impacts to the Koala as a result of construction and operation of the Project.

1.2 Objectives

This FMP has been developed to describe the impacts and proposed mitigation measures to be implemented during the construction and operation phases of the Project to minimise impacts to the Koala. To assist with the identification of impacts that can be directly attributed to, and managed during the construction of the Project, existing threats and impacts to this species in a regional context have also been considered.

An important component of any management plan is that the outcomes are quantifiable through an assessment against performance indicators. As such, this FMP outlines key performance indicators and monitoring requirements to assess the effectiveness of the mitigation measures proposed during the construction and operational phases of the Project. Contingency measures and corrective actions to be applied in the event that a non-conformance occurring have been developed.

Table 1 provides a summary of the structure of the FMP, identifying where specific aspects of Item 1.1, 2.1, 2.2 and 3.1 of the RFI are addressed.

Table 1: RFI Requirements Specific to the FMP

Item no	Item requirement	Reference in the FMP	Demonstration of how the plan addresses the item requirements in the RFI
1.1	**The preliminary documentation must provide:**		
(i)	Updated maps detailing areas of disturbance overlaid with known populations and habitat for Koala, including known movement corridors within and in the vicinity of the site.	Section 3.5.1, 3.5.2 and 3.5.3	This FMP details the areas of disturbance against known Koala habitat. It also considers the known populations of Koalas and movement corridors within the Project. Known movement corridors along the Peak Downs Highway are further considered in Attachment 2
2.1	**The preliminary documentation must provide an assessment of potential impacts (including direct, indirect, consequential and cumulative impacts) that may occur as a result of all elements and project phases of the proposed action on the Koala. Consideration of impacts must not be confined to the immediate areas surrounding the proposed action but also must consider the potential of the proposed action to impact on adjacent areas that are likely to contain Koala. This must include, but not be limited to, an assessment of:**		

Item no	Item requirement	Reference in the FMP	Demonstration of how the plan addresses the item requirements in the RFI
(i)	The quantum and quality of habitat in hectares likely to be directly impacted	Section 3.5.1	The FMP identifies the area of Koala habitat to be impacted. The quality of the habitat is further described in Attachment 2.
(ii)	Details on whether any impacts are likely to be unknown, unpredictable or irreversible.	Section 4.1, 4.2, and 4.3	The FMP identifies the threats and the ability to quantify potential impacts
(iii)	Analysis of the potential magnitude of the relevant impacts and the acceptability of the impacts	Section 4.1, 4.2, 4.3 and 5	This FMP includes an Environmental Risk Assessment in accordance with the DoE guidelines which assesses the expected or predicted effectiveness of the mitigation measures
(iv)	Any technical data and other information used or needed to make a detailed assessment of the relevant impacts.	Throughout the document	
3.1	**As well as the clearing of Koala habitat, the Department considers that the proposed action may result in loss of habitat connectivity for Koalas, edge effects, increased vehicle strikes and Koala mortality or injury during the construction phase. To assist in our assessment of these potential impacts, please provide a revised Koala or Fauna or management Plan including:**		
(i)	The location and design of exclusion fencing to benefit Koalas within the proposed project site during construction and post construction, including ongoing maintenance plans and maps;	Design Drawings (Appendix A & Appendix B), Figure 8 Figure 9	This FMP provides details of the location and design of exclusion fencing for the Project, including detailed design plans.
(ii)	The location and design of proposed permanent culverts, underpasses and/or fauna crossings to benefit Koalas, within the proposed project site, including maps;	Design Drawings (Appendix B), Figure 8 and Figure 9	This FMP provides details of the location and design of the proposed permanent fauna underpass to benefit Koalas, including detailed design plans.
(iii)	The timing for installing the proposed exclusion fencing, culverts, underpasses and/or fauna crossings at each location within the proposed project site;	Section 4.1.2 and 4.1.3	This FMP discusses the timing for installation of Koala mitigation measures within the Project.
(iv)	Traffic management plans aimed at minimising impacts on fauna (please also include the location and design of road traffic barriers);	Section 4.1.2, 4.1.3 and Figure **8**	Included in this FMP is traffic control mitigation measures to minimise the impacts on fauna.
(v)	Clear and concise outcomes and performance indicators against which achievement of the outcomes identified will be measured;	Section 4.4 (Table 5)	This FMP defines performance indicators for monitoring and corrective actions to enable adaptive mechanisms to be implemented, in the event of non-conformance.
(vi)	Methods to monitor the impact and effectiveness of the mitigation and management measures described above;	Section 4.4 (Table 5)	The monitoring measures specified are appropriate to the species in question and nature of the construction activity. These are in accordance with TMR's approach to fauna monitoring for road projects.
(vii)	Identification of the contingency measures and appropriate corrective actions that reflect an adaptive approach to be undertaken if the performance indicators or outcomes are not met;	Section 4.4 (Table 5)	The monitoring requirements also specify corrective measures to be implemented in the event of non-conformance with performance criteria.
(viii)	Assessment of the expected or predicted effectiveness of the avoidance and mitigation measures for Koalas, including the scale and intensity of impacts of the proposed action and the on-ground benefits to be gained through each of these measures.	Section 5.3 (Table 7)	This FMP includes an Environmental Risk Assessment in accordance with the DoE guidelines which assesses the expected or predicted effectiveness of the mitigation measures.

2. Project Description

2.1 Project Overview

The proposed action is the realignment of a section of the Peak Downs Highway through Spencer's Gap on the Eton Range – the 'Eton Range crossing' located between Mackay and Nebo. The existing Eton Range crossing has tight curves and a very steep grade (maximum 11%), rising 130 m in a little less than 1.5 km. The Eton Range crossing has been the subject of significant adverse media coverage in relation to road safety and heavy vehicle traction and trafficability issues. Representatives of local heavy vehicle transport operators have been very vocal in communications with TMR, political representatives and the media that the range urgently needs upgrading to address these issues.

Specific details of the proposed action are listed in Section 1.1 of the Preliminary Documentation Main Report.

As discussed in the Preliminary Documentation Main Report, approximately 12.728 ha of vegetation was previously removed for the Project. This was undertaken to accommodate survey, geotechnical works, access, and trial embankment works undertaken in 2014 and 2015. This trial area was subject to significant previous disturbance from the installation of Telstra and Ergon infrastructure, geotechnical investigations and survey. A Significant Impact Assessment for the Koala was carried out in December 2013 (EcoSM, 2013) which identified that the Project was unlikely to have a significant impact on any Matters of National Environmental Significance (MNES). Due the publication of the 'EPBC Act referral guidelines for the Vulnerable Koala' in late 2014, an additional environment assessment was conducted by TMR, and the decision was made to refer the Project for consideration.

These previously cleared areas have been included within the Project area described within this document (Refer to Appendix C for the Project's Clearance Plans).

3. Koala (*Phascolarctos cinereus*)

3.1 Habitat Requirements

The Koala is an arboreal herbivore that relies heavily on the presence of Eucalyptus species and related genera within a range of vegetation communities including forests, woodlands and semiarid communities.

The *EPBC Act Referral Guidelines for the vulnerable Koala* defines Koala habitat as:

"Any forest or woodland containing species that are known Koala food trees, or shrub land with emergent food trees. This can include remnant and non-remnant vegetation in natural, agricultural, urban and peri-urban environments. Koala habitat is defined by the vegetation community present and the vegetation structure; Koalas do not necessarily have to be present."

As stated in the above definition, the location of Koala habitat is heavily dependent on the availability of Koala food trees. *The EPBC Act Referral Guidelines for the vulnerable Koala* define a Koala food tree as a:

"Species of tree whose leaves are consumed by Koalas. Koala food trees can generally be considered to be those of the following genus: Angophora, Corymbia, Eucalyptus, Lophostemon and Melaleuca. Note that food tree species may vary spatially and temporally and information specific to the local area is likely to be most accurate."

3.2 Breeding

The Species Profile and Threats Database for the Koala (DoE, 2015a) documents the breeding season for the Koala occurring between October and May, though Ellis et al (2010) suggest that 60% of births occur between December and March. Males begin to breed at three to four years of age. Females breed when they are two years old, generally giving birth each year. Following a pregnancy of 35 days, a Koala gives birth to a single young. The young stays in the pouch for the next six months before emerging. The joey will then spend between six and 12 months riding on its mothers back. Generally, by 12 months of age, the young is weaned and takes up a home range, which overlaps with its mother, for much of the next year. Between the age of two and three years these young disperse beyond their original home range to establish their own range, usually during the breeding season (DEHP, 2012).

3.3 Distribution

Koalas are endemic to Australia, known to occur across much of the east coast of the country. The main populations are within Queensland, New South Wales and the Australian Capital Territory, though small populations are also present in Victoria and South Australia.

The Koala populations are scattered throughout Queensland, in moist forests along the coast, sub-humid woodlands in southern and central Queensland, and in some eucalypt woodlands along watercourses in the semi-arid environments of the western part of the State. The highest population densities of Koalas occur in the South East Queensland bioregion. The Koala has also been found to occur in non-riverine communities in semi-arid areas (DoE, 2015a).

Koalas are solitary animals living within a network of overlapping home ranges, which allows contact between individuals for mating. Home ranges vary in size depending on the density of the population and the abundance of suitable food trees. For example, at Blair Athol in central Queensland approximately 200 km south west from the Project, male home ranges were estimated at 135 ha and female home ranges were estimated at 101 ha (Ellis et al, 2002).

The EPBC Listing Advice for the Koala (TSSC, 2012) did not find any published estimates of Koala population size or density in the Wet Tropics and Central Mackay Coast bioregions.

3.4 Conservation Status and Threats

Koala populations of Queensland, New South Wales and the Australian Capital Territory were listed as vulnerable under the EPBC Act in April 2012. This applies to the combined populations of states listed above only. As of August 2015, the Koala is also listed as vulnerable under the *Nature Conservation (Wildlife) Regulation 2006*.

The DoE Species Profiles and Threats database (SPRAT) for Koalas provides an estimate on the populations across their range. In Queensland, the population estimate was 167,000 individuals in 2010 which is a 43% decline from the 1990 population, estimated to be 295,000 individuals (DoE, 2015a).

A number of significant threats to Koala populations have been identified through years of research. A summary of the threats identified is provided in the listing advice on the SPRAT database (DoE, 2015a) as shown in Table 2.

Table 2: Significant Threats to Koala

Threat	Description of associated issues
Habitat loss and fragmentation	Urbanisation and land clearing are a major threat to Koala habitat. There are direct impacts that result from vegetation removal such as mortality, in addition to indirect impacts through habitat and movement corridor removal, edge effects and pressuring Koalas into small areas of urban vegetation. Urbanisation results in increased risk of vehicle strike and wild dog attack (DoE, 2015a), which is discussed in more detail below. There is little known of the full extent, connectivity or ecology of the Koala population within the region, and it is therefore difficult to make conclusions of the significance of impacts from the Project of either the local or regional population.
Habitat degradation	Habitat degradation is a threat to Koalas in areas that are overpopulated. High densities of Koalas have the potential to defoliate forests to a point where populations decline due to insufficient available resources.
Mortality as a result of vehicle strike and dog attacks	With increasing urbanisation of areas adjacent to Koala habitat the impact of dog attack and the potential for vehicle strike has increased significantly. Reports have measured the combined impact of dog attack and vehicle strike across the South East Queensland. A 64% decline in the population was observed between 1999 and 2009 by Dique *et. al. (*2004) and Queensland DERM (2009).
Disease	Chlamydia has long been a well-known disease commonly occurring in Koalas. Many Koalas carry the disease but do not always express the symptoms which include eye, urinary tract, respiratory tract and reproductive tract infections (DoE, 2015a). There is potential for the disease to cause reduced fertility, thereby impacting local population sizes. Koala retrovirus is a more recently discovered disease that may also result in severe consequences in Koala populations. This disease is thought to be responsible for a range of conditions such as leukaemia and immunodeficiency syndrome (DoE, 2015a). It is transmitted through genetics, from mother to offspring, and also between Koalas in close contact to each other.
Climate change and drought	Projected climate changes, including increased temperatures, changes to rainfall, increased frequency and intensity of droughts and fire have the potential to affect the long term viability of Koala habitats (NRMMC, 2009).

3.5 Distribution of Koalas and Habitat within the Project Area

The ‘Project area’ in this Report is defined as the area within the resumption boundary that is required to accommodate the construction of two dual lane carriageways, split carriageways, and general road construction for 3.756 km of the ‘Eton Range crossing’ on the Peak Downs Highway between Mackay and Nebo. The alignment traverses the Spencer Gap Forest Reserve, unallocated state land and freehold land. A locality map is provided in Figure 1.

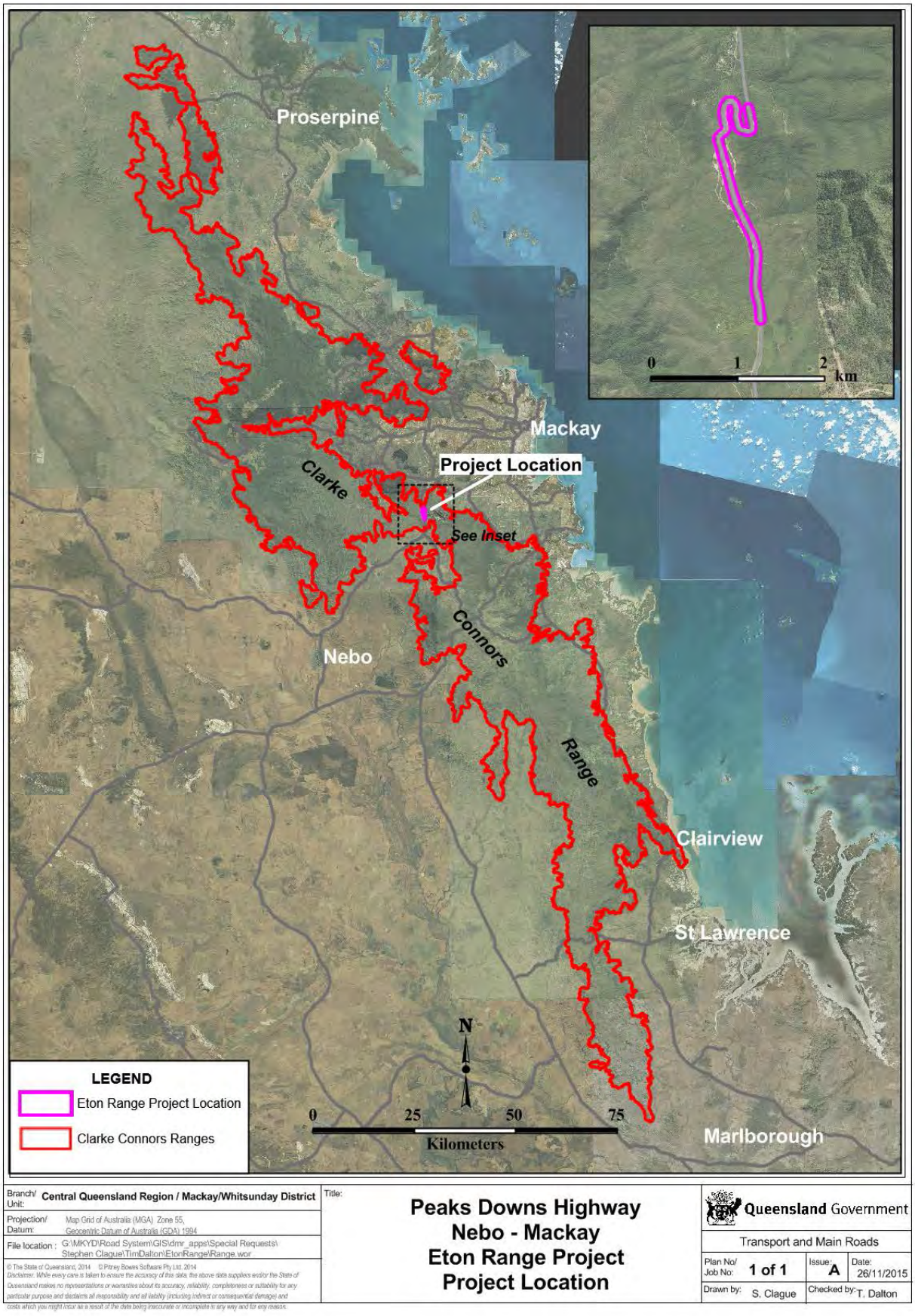

Figure 1: Project Locality

3.5.1 Koala Habitat within the Project Area

At a Federal level, Koala habitat is mapped across the Mackay region as 'likely to occur' and 'known to occur' under Commonwealth indicative mapping, as shown in Figure 2.

Figure 2: Indicative Distribution Map of the Koala (DoE, 2015)

As discussed in section 3.1, the *EPBC Act Referral Guidelines for the vulnerable Koala* (DoE, 2014a) describe Koala habitat as '*any forest or woodland containing species that are known Koala food trees*.' and Koala food trees as '*species of tree whose leaves are consumed by Koalas*'. The guidelines note that Koala food trees are generally considered to be of the *Angophora, Corymbia, Eucalyptus, Lophostemon* and *Melaleuca* genera.

It is noted that the above definitions do not provide a comprehensive list of Koala habitat and/or Koala food tree species relevant to the Mackay Local Government area. However, the definition of Koala habitat and/or Koala food trees provided in the *EPBC Act Referral Guidelines for the vulnerable Koala* (DoE, 2014a) can be applied to the region through the use of mapped regional ecosystems (REs) which are dominated by trees of the *Angophora, Corymbia, Eucalyptus, Lophostemon* and *Melaleuca* genera.

A total of four Regional Ecosystems were identified within the Project area during detailed field surveys. All of the vegetation communities that were identified align with remnant Regional Ecosystems (REs) that have a VM Act Vegetation Management status of 'Least Concern' and Biodiversity status of 'No concern at present'. RE 8.12.5 is endemic to the sub-region (Clark-Connors Range province) while the other three REs occur ubiquitously upon ranges, hills and/or footslopes throughout the Central Queensland Coast bioregion.

Koalas were recorded at three locations during November 2013 field surveys of the Project area (EcoSM, 2013), and with the exception of the vine thicket community represented by RE 8.12.3, all vegetation in the Project area is expected to provide suitable habitat for this species. The abundance of the Koala in the Project area is considered to be relatively high, reflective of the extent of Koala habitat distribution across the broader Eton and Clarke-Connors Ranges.

A list and description of the four Regional Ecosystems (RE) is provided in Table 3, including the dominant species of each and an indication of the level of field verification. Note that Table 3 includes vegetation previously cleared for undertaken trial works (see Section 2.1). The location and distribution of the field verified REs mapped by Ecological Survey and Management (EcoSM, 2013) within the Project area are shown in Figure 3.

At a State level, the remnant vegetation mapped within the Project is not mapped as essential habitat under the VM Act.

Table 3: Field Verified Regional Ecosystems

Field Verified Regional Ecosystem	Vegetation Community Description	Total Area Impacted (ha)	Potential Koala Habitat
8.12.3	Located along the larger drainage lines and upon steeply inclined, rocky scree slopes of the Project area. Vegetation is primarily evergreen to semi-evergreen, notophyll to microphyll, vine forest to vine thicket, of foothills and uplands on Mesozoic to Proterozoic igneous rocks. Contains *Alstonia constricta, Cissuss spp, Ficus spp, Macaranga tanarius* and other mixed rainforest species. Primary Koala food trees are absent from the site.	0.634 ha	No
8.12.5	Located within the central extent and upon steeply inclined slopes of the Project area. *Eucalyptus portuensis* and/or *Lophostemon confertus* and/or *E. exserta* and/or *Corymbia trachyphloia* and/or *E. fibrosa* open forest on Mesozoic to Proterozoic igneous rocks. Primary Koala food trees are present within the community and evidence of Koala occupation was noted during surveys. KSAT surveys undertaken within the community noted low activity levels.	2.160 ha	Yes

8.12.12	Located upon the crests of steeply inclined spurs within the central extent of the Project area and in slopes and crests of undulating rolling hills and footslopes to the north. Contains *Eucalyptus tereticornis* and/or *Corymbia spp*. and/or *E. platyphylla* and/or *Lophostemon suaveolens* woodland to open forest on hill slopes on Mesozoic to Proterozoic igneous rocks. Contains a mixture of native and exotic understorey, including significant *Lantana camara* incursion, *Themeda triandra*, and *Xanthorrhoea latifolia*. Primary Koala food trees are present within the community and evidence of Koala occupation was noted during surveys. KSAT surveys undertaken within the community noted varying activity levels, and it was identified that the presence of Lantana was likely inhibiting Koala access to the base of food trees.	5.461 ha	Yes
8.12.7 (incl. 8.12.7c)	The most represented community within and immediately adjacent to the Project area. Located upon the gently to moderately undulated crest and upper slopes of the range. Contains *Corymbia citriodora* +/- *Eucalyptus portuensis* +/- *E. drepanophylla* (or *E. crebra*) open forest on hill slopes and undulating plateaus, on Mesozoic to Proterozoic igneous rocks. Contains a mixture of native and exotic understorey, including *Lantana camara* incursion, *Themeda triandra*, and *Xanthorrhoea latifolia*. Primary food trees are present and evidence of Koala occupation, including visual sightings, was noted during site inspections. KSAT surveys undertaken within the community noted the highest activity levels within the Project area.	17.841 ha	Yes
Non Remnant Vegetation	Areas disturbed prior to 2013 EcoSM assessment. Includes juvenile and semi mature *Corymbia citriodora*, *Corymbia clarksoniana* and *Eucalyptus drepanophylla* with scattered *Lantana camara* and exotic grasses.	5.405 ha	Yes
	Total	**31.501 ha**	
	Total Koala Habitat	**30.867 ha**	

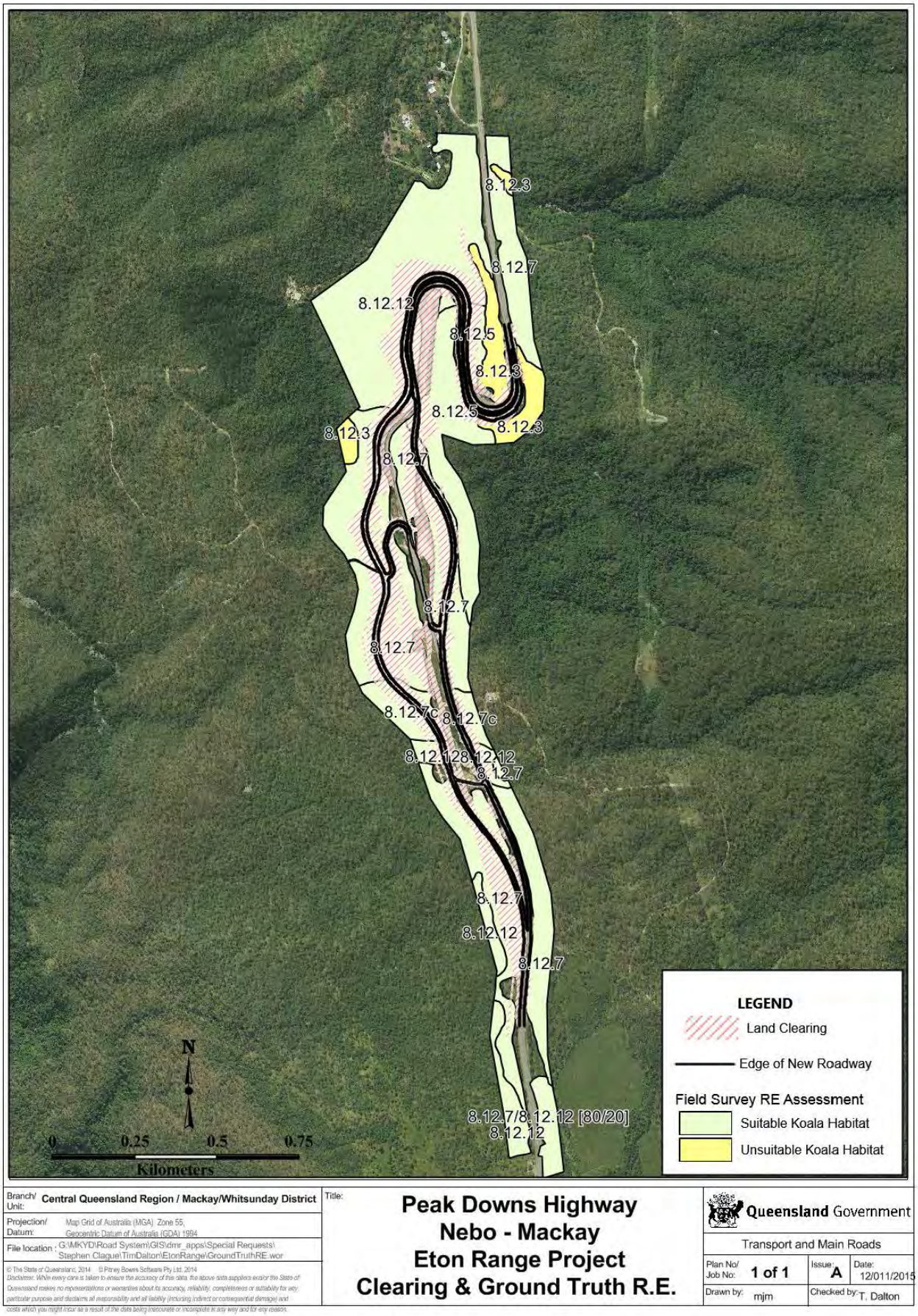

Branch/ Unit:	Central Queensland Region / Mackay/Whitsunday District	Title:	Peak Downs Highway Nebo - Mackay Eton Range Project Clearing & Ground Truth R.E.
Projection/ Datum:	Map Grid of Australia (MGA) Zone 55, Geocentric Datum of Australia (GDA) 1994		Queensland Government
File location :	G:\MKYD\Road System\GIS\dmr_apps\Special Requests\ Stephen Clague\TimDalton\EtonRange\GroundTruthRE.wor		Transport and Main Roads
© The State of Queensland, 2014 © Pitney Bowes Software Pty Ltd, 2014 Disclaimer: While every care is taken to ensure the accuracy of the data, the above data supplies and/or the State of Queensland makes no representations or warranties about its accuracy, reliability, completeness or suitability for any particular purpose and disclaims all responsibility and all liability (including indirect or consequential damage) and costs which you might incur as a result of the data being inaccurate or incomplete in any way and for any reason.		Plan No/ Job No: 1 of 1	Issue: A / Date: 12/011/2015
		Drawn by: mjm	Checked by: T. Dalton

Figure 3: Clearing and Field Verified Regional Ecosystems

Koala habitat within the Project area has been assessed in accordance with the Koala Habitat Assessment Tool contained within Section 6 of the *EPBC Act Referral Guidelines for the vulnerable Koala* (DoE, 2014a). A score of 2 is high, a score of 1 is medium and a score of 0 is low. The assessment is provided in Table 4, with justification for the allocation of each score. To inform this assessment, a desktop investigation, review of previous information and targeted field surveys have been undertaken. A total score of 5 or more indicates the habitat is considered 'critical to the survival of the Koala' and triggers referral of a proposed action under the EPBC Act. This assessment below with a habitat score of 8 was used to determine that the Project initially required an EPBC Referral.

Table 4: Koala Habitat Assessment

Attribute	Score	Habitat Appraisal	
Koala Occurrence	+2	Desktop	• EPBC PMST report identifies the Koala as "known to occur" in the Project Area • Qld Wildlife Online results show 18 records of the Koala within 20km of the Project area. • The Atlas of Living Australia has no records within the vicinity of the Project area.
		On-ground	• Line transect survey over 25 ha of habitat (EcoSM, 2013) identified 3 Koalas within the Project area. • Koalas were heard calling in adjacent areas during spotlight survey (EcoSM, 2013) • Koala Spot Assessment Technique surveys across 10 sites within and adjacent to the Project area (SMEC, 2015), indicated low Koala activity levels along the steep slopes within the northern end of the Project and medium and high activity levels at the southern lower grade end of the Project area. Activity levels range from 0 to 57%, averaging 24.3%.
Vegetation composition	+2	Desktop	• Regional Ecosystem Mapping (DEHP, 2015) indicates 3 of the 4 Regional Ecosystems contain Koala food trees: • Aerial imagery for the site indicates that the vegetation is open forest or woodland with a closed canopy structure.
		On-ground	• Using the modified BioCondition methodology, habitat condition scores were established for 17 sites within the Project Area, representing each of the four REs occurring in the Project Area. The Project Area presented an average condition score. However, patches within REs 8.12.3, 8.12.5 and 8.12.7 represented relatively good condition. The average condition score for the Project Area is most likely a reflection of the existing disturbance within the Project Area, resulting from the existing Peak Downs Highway. • Vegetation composition determined during Koala SAT indicates the site is dominated by Koala food trees, including but not limited to *Corymbia citriodora var. citriodora, Eucalyptus drepanophylla, Eucalyptus exserta* and *Eucalyptus portuensis*.
Habitat Connectivity	+2	• The Project area forms part of the Clarke-Connors Ranges sub-bioregion, a large connected landscape of remnant vegetation. • The size of the contiguous habitat landscape is approximately 200,000 ha, fragmented by the existing Peak Downs Highway.	

Attribute	Score	Habitat Appraisal
Key Existing Threats	+1	• Based on anecdotal evidence, the history of Koala mortality from vehicle strike is not significant in the Project location, particularly on steep parts of the range. However, there is some evidence of Koala strike to the south of the Eton Range crossing and it is likely that Koalas cross the existing Peak Downs Highway, given that scats were observed on both sides of the Highway. There is a known significant Koala movement corridor 10 km south-west of the Project area where a significant number of Koala fatalities have been recorded on a stretch of the Peak Downs Highway. However, based on Koala home range size (White 1999, Ellis et al. 2009, Mitchell 1990), it is unlikely that the Koala population in the Project Area would be crossing at that location. The important crossing points are expected to be in the flatter sections of the Highway at the top of the range (CH 49,800 – 51, 200 m), where Koala activity levels were highest. • There is evidence of wild dogs on the Eton Range, however, no data regarding dog attacks is available for the Project area. Given the density of Koalas within and surrounding the Project area, dog attacks are not considered a key existing threat to the population.
Recovery Value	+1	Habitat is not considered particularly unique in comparison to the wider Project area. It is expected that the more intact and remote areas of the Clarke-Connors Ranges sub-bioregion provide more important habitat for this species. Removal of 30 ha of Koala habitat along a 3.5 km stretch adjacent to the existing Peak Downs Highway will not significantly impact on the interim recovery objectives by destroying large, connected areas of Koala habitat or reducing corridors and connective habitat.
Total	**8**	Habitat is critical to the survival of the Koala (≥5). The action is likely to adversely affect habitat critical to the survival of the Koala (through removal of 30.867 ha of habitat containing known Koala food trees) and therefore referral is recommended due to the high risk of the action resulting in significant impact.

3.5.2 Habitat Connectivity

The DEHP Biodiversity Planning Assessment mapping identifies the terrestrial ecological values of an area according to their conservation significance i.e. whether they are of regional or state significance. The Project area, traversing the Eton Range, is mapped as part of local, regional and state ecological corridors in the BPA mapping (refer Figure 4).

A substantial portion of the range lies within protected areas, including the adjacent Spencer's Gap State Forest and the nearby Ben Mohr State Forest. Although there are some freehold land parcels adjacent to the Project alignment, the terrain and geology of the range has largely precluded their clearing for agriculture or large scale resource extraction.

The Project lies within a large connected landscape of remnant vegetation associated with the Eton and the larger Clarke-Connors Ranges. This landscape corridor links important refuges of Spencer's Gap State Forest and Ben Mohr State Forest in close proximity to the Project area and Crediton State Forest, Homevale National Park and Eungella National Park further west and north-west of the Project area.

The extent of the potential Koala habitat in the immediate area adjoining the Project is displayed in Figure 5.

While these ecological corridors have the potential to provide connectivity between areas of Koala habitat at a local, regional and state scale, existing barriers may impede movement at a local scale. An existing barrier for the Project area is the existing Peak Downs Highway, which already traverses the Eton Range. A specific scoring of the Project area's connectivity was determined by EcoSM (2013) utilising this data.

The Field Survey Report for Matters of National Environmental Significance (SMEC, 2015), identified that it is likely that Koalas cross the existing Peak Downs Highway, given that scats were observed on both sides of the highway. There is a known Koala movement corridor 10 km south-west of the Project area where a significant number of Koala fatalities have been recorded on a stretch of the Peak Downs Highway. However, based on Koala home range size (White 1999, Ellis et al. 2009, Mitchell 1990), it is unlikely that the Koala population in the Project area would be crossing at that location. The important crossing points are expected to be in the flatter section of the highway at the top of the range (CH 49,800 – 51,200 m), where Koala activity levels were highest.

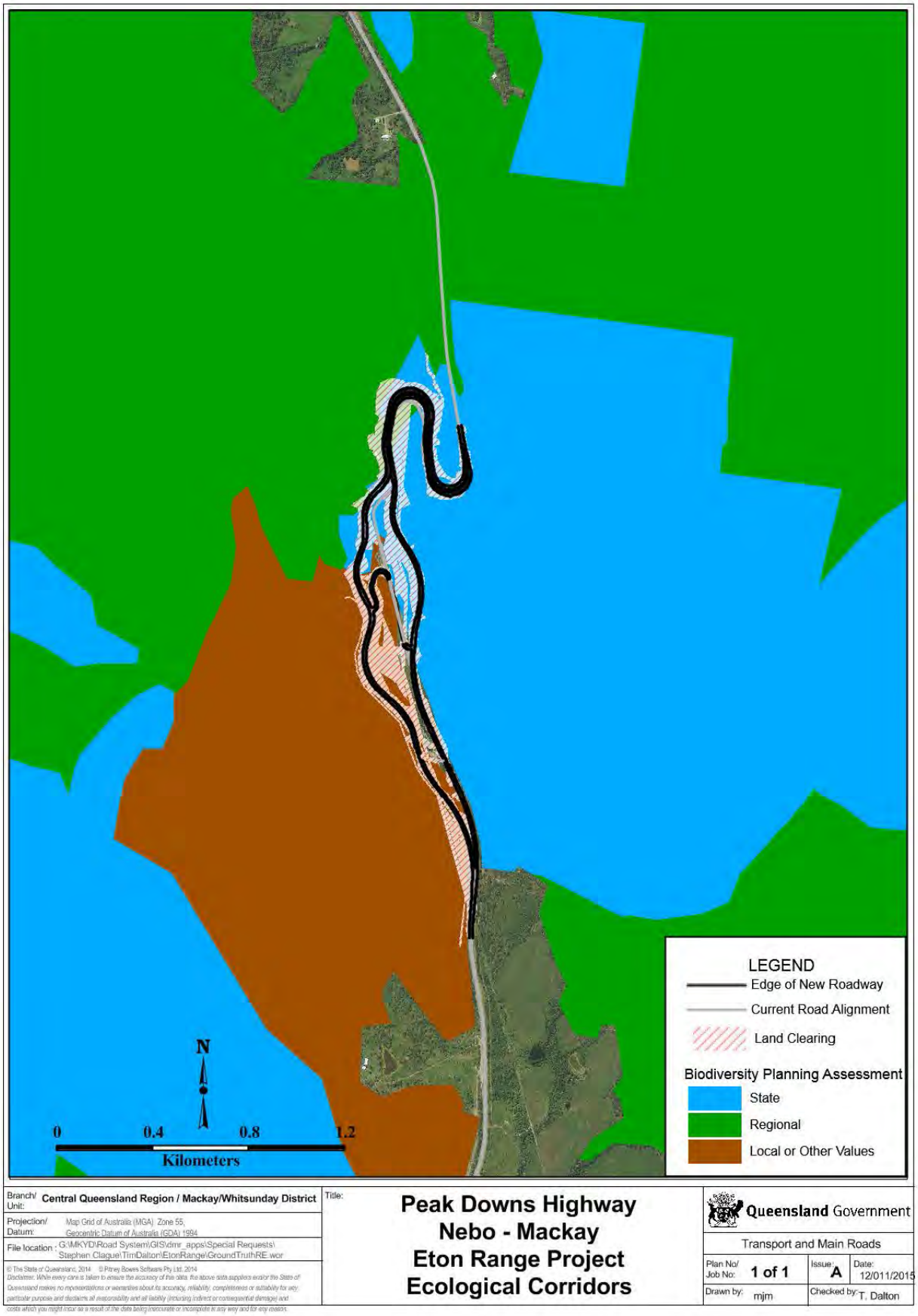

Figure 4: Ecological Corridors in the Project Area

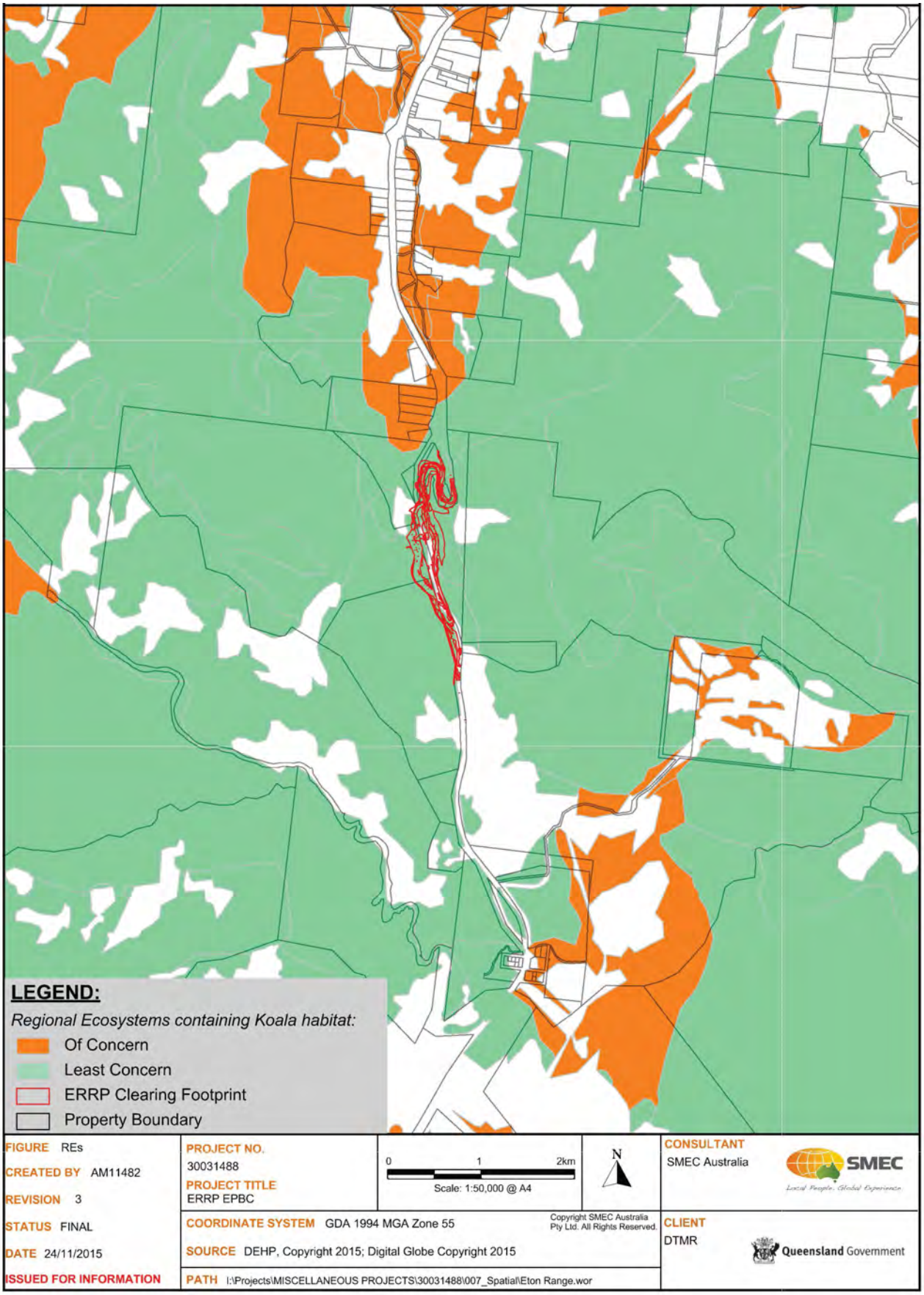

Figure 5: Remnant vegetation containing Koala habitat in the wider Project area

3.5.3 Historic Koala Records

Historic records of Koala sightings are maintained by the DEHP in the Wildlife Online database. A review of data identified one Koala sighting within the Project area (DEHP, 2015). All other records occur in the surrounding region, most notably approximately 10km south west of the Project area, and are further discussed in Attachment 2.

In addition, DEHP provided TMR with data collected by Central Queensland University (CQU) from public records and sightings (DEHP, 2015). Although this data is somewhat unreliable due to the lack of scientific rigour behind its acquisition, it has the ability to reflect patterns relating to the Koala population. One additional Koala sighting was identified within the Project area from this separate data.

The Koala records obtained from DEHP and CQU within the project extent are provided in Figure 6. The recorded presence of Koalas on either side of the Project alignment indicates that a Koala population exists, or has previously existed, and that vegetation communities within the general Project area are likely to be utilised as habitat.

Figure 6: Historic Koala Records in the Project Area

3.5.4 Results of Field Investigations

A number of field investigations have been completed in the Project and surrounding area. Refer to Section 2.2.2 of the Preliminary Documentation Main Report for a brief overview of the approaches and summarised outcomes relevant to the Koala.

3.5.5 Estimated Koala Population

The EPBC Listing Advice for the Koala (TSSC, 2012) did not find any published estimates of Koala population size or density in the Wet Tropics and Central Mackay Coast bioregions.

Numerous ecological surveys have been undertaken within the Project area and surrounds, with direct observations of Koala recorded within the Project area. A line transect survey over 25 ha of habitat (EcoSM, 2013) identified 3 Koalas within the Project area. Koalas were also heard calling in adjacent areas during spotlight survey (EcoSM, 2013). Koala Spot Assessment Technique (KSAT) surveys across 10 sites within and adjacent to the Project area (SMEC, 2015) indicated low Koala activity levels along the steep slopes within the northern end of the Project area and medium and high activity levels at the southern lower grade end of the Project area. Activity levels range from 0 to 57%, averaging 24.3%.

The KSAT methodology adapted from Phillips and Callaghan (2011) categorises the activity levels into low, medium (normal) or high use, based on the mean activity level. This is further broken down into activity categories, based on the density of the area. The Project area has been identified as an East Coast (med-high) use 'activity category', whereby the following categorisation of activity levels applies:

(1) Low use = less than 22.52%

(2) Medium use = more than or equal to 22.52% and less than or equal to 32.84%; and

(3) High use = more than 32.84%.

Within the Project area (the impact sites), three (3) KSATs were determined to have low use, one (1) had medium use while two (2) had high use. The control sites identified two (2) KSATs with low use, one (1) with medium use while one (1) had high use. One low activity site at each of the impact and control areas recorded a scat beneath 20% of trees, so they were close to the threshold of medium activity. This suggests that the Koala population extends across the Project area but also into adjacent habitat.

4. Potential Impacts of the Project and Mitigation Management Measures

A number of potential impacts to the Koala were identified in the EPBC Act referral (2015/7552) for the Project. These include direct loss of fauna habitat, habitat fragmentation and subsequent impacts from fragmentation including fatalities or injury through car strikes, dog attacks and disease.

In general, roads have negative effects on species abundance by increasing mortality, reducing connectivity, reducing habitat size and quality and altering animal behaviour (Polak et. al, 2014). These effects are likely to manifest themselves to varying degrees as a consequence of the Project.

The following sections outline each of the potential impacts to the Koala as a result of the Project, with consideration of the existing conditions, and proposed mitigation measures. Direct, indirect, and cumulative impacts are discussed. An assessment of impacts and identification of residual impacts is contained in Attachment 2. Management actions for Koalas have been developed with reference to the following relevant guidelines and previous investigations:

- EPBC Act *Referral Guidelines for the vulnerable Koala* (2014a)
- DoE's Environmental Management Plan Guideline (2014b)
- EPBC Act Referral for the Project (2014) – EPBC Ref: 2015/7552
- Eton Range Realignment Project, *Field Survey Report for Matters of National Environmental Significance,* (SMEC, 2015)
- Ecological Assessment Report Peak Downs Highway Realignment Eton Range Crossing, (EcoSM, 2009)
- Eton Range Realignment Project Fauna Assessment Report, (EcoSM, 2013)
- Koala-sensitive Design Guideline – A guide to Koala-sensitive design measures for planning and development activities (DEHP, 2012)
- Fauna Sensitive Road Design Volume 2 (TMR, 2010)
- Listing advice for *Phascolarctos cinereus* (Koala) (TSSC, 2012).

4.1 Direct Impacts

4.1.1 Habitat Removal

4.1.1.1 Potential Impacts of the Project

The Project will result in the direct removal of 30.867 ha of Koala habitat. Habitat loss is regarded as having a number of potentially compounding negative impacts (Fahig, 2001, 2002) including habitat fragmentation, increase in Koala/human interaction and reduction in connectivity between populations. These impacts tend to be more significant, and to be observable more rapidly, in areas where existing habitat was limited or marginal in the first place and comes under increasing anthropogenic development pressure (Mcalpine, 2006; Mcalpine et.al, 2015; de Villers, 2015). The compounding (cumulative) impacts mentioned above are discussed further in Section 4.3.

As previously described, review of recent field investigations and limited existing research has suggested that the population of Koalas in the Project area is consistent with Phillips and Callaghan (2011) 'East Coast – med-high' category, and was assessed as containing habitat that is 'critical to the survival of the Koala' in accordance with the Koala Habitat Assessment Tool provided in the *EPBC Act Referral Guidelines for the vulnerable Koala* (DoE, 2014a). Section 3.5 describes the results of this assessment, the REs present within the Project area, and the species composition of each vegetation community. Three of the four REs mapped and field verified within the Project area provide suitable habitat for Koala as they are dominated by Eucalypts and related genera.

The extensive area of potential Koala habitat which exists around the Project area and the fact that there is an existing road, suggests that the Project will not have an impact comparable to impacts experienced in more urbanised areas of Queensland. However, there is a paucity of information regarding the regional Koala population in the Clarke-Connors

range generally, and the Eton Range area specifically (excluding the Project area). This makes accurate prediction of long term impacts resulting from the Project difficult, resulting in a largely unknown impact.

4.1.1.2 Management and Mitigation Measures

The following management and mitigation measures will be incorporated into the construction contract documentation for the construction phase of the Project to minimise the impacts of habitat removal:

Minimise Clearing

Clearing will be limited to the disturbance area required for the construction and operation phases of the Project, and will be clearly defined in the Project contract documentation. A plan of clearing limits has been prepared by TMR (Appendix C), and clearing shall not proceed on site until physical limits of clearing have been approved by the Contract Administrator. Clearing will not be permitted outside these extents, without prior approval from the Contract Administrator.

Staged Clearing

A staged and sequential clearing process will be adopted along the Project area to ensure that Koalas living in or near the area being cleared have enough time to move out of the clearing site without human intervention.

Clearing will be carried out in stages, with no more than 3 ha being cleared in any one stage. Within each stage of clearing, sequential clearing principles will be employed during clearing activities. In accordance with the TMR Fauna Sensitive Road Design Manual (2010) this will include:

- Vegetation clearing to be carried out in a way that allows Koalas in the area subject to clearing sufficient time to move out of the clearing site without human intervention;
- Vegetation clearing to be carried out in a way that ensures habitat links are maintained for as long as possible within the clearing site and between the site and its adjacent areas to allow Koalas to move away;
- Trees with Koalas present are not to be cleared, as well as trees that overlap with such trees, until the Koala has moved on; and
- Avoid the placement of fill on the root zone of eucalypts which are to be retained, as the fill starves the roots of oxygen and water.

In addition, between each clearing stage, there is at least one period of 12 hours (6 pm – 6 am) during which no trees are cleared on site.

Fauna Fencing

Fauna fencing is planned to minimise risk of vehicle strike during operation of the highway, which is further discussed in Section 4.1.2. As part of the construction scheduling, TMR is planning the early installation of fauna fencing in association with staged and sequential clearing where practical, to exclude fauna from the construction zone. Where early installation is not feasible or practical, temporary no-entry fencing will be installed and replaced with permanent fauna fencing on completion of works in an area. The fauna fencing specification will be installed based on the New South Wales Roads and Maritime *Fauna Exclusion Fence* drawing (attached in Appendix A). Fauna fencing will be installed in accordance with the following principles to reduce the impact of fences on Koala movement and mortality:

- Fauna fencing will extend at least 100m or to a natural barrier either side of a nominated fauna crossing location (refer Section 4.1.2);
- The ‘floppy top’ design is proposed so that Koalas on the safe side can climb it but it will flop over with the animal’s weight and force it to drop back to the ground. Conversely, Koalas will be able to easily grip and climb over the fence to the safe side if they are somehow stuck within the road reserve;
- Nearby trees and shrubs will be at least 3m away from exclusion fencing;
- Fauna fencing will be installed to limit the potential for fauna (including Koalas) from entering the Project area; and
- Fauna fencing will be installed with appropriate clearance zones to minimise opportunities for fauna to jump from adjacent vegetation and climb over the fence into the Project area.

The fauna fencing for the Project is displayed on design drawings attached in Appendix B.

Fauna Spotter/Catcher

Prior to the commencement of clearing each stage, the disturbance footprint will be surveyed for the presence of Koalas and evidence of recent Koala habitation. Tree trunks will be assessed for scratch marks caused by Koalas climbing. Two ecologists will conduct the survey the day prior to clearing to ensure that the survey is relevant and accurate. If a Koala is observed in a tree within the Project area, the position of the tree will be recorded by a hand held GPS and details recorded.

The fauna spotter/catcher will be present during clearing activities to clear the area of fauna and minimise the risk of Koala or other fauna mortality. The fauna spotter/catcher will prepare and submit a post-clearing report to the Contract Administrator no later than 14 days following completion of clearing in an area.

Spotter/catcher principles (TMR, 2010) that will be applied on the Project are listed below.

- A fauna spotter/catcher must be present during clearing.
- The fauna spotter/catcher must be suitably qualified for the task and also have the appropriate permits/licences in place from the Queensland government.
- If there is more than one machine operating (clearing vegetation), there will be the requirement for more than one fauna spotter/catcher.
- The fauna spotter/catcher must be in close proximity to the vegetation being cleared.
- Their role is to spot fauna in vegetation, mark any trees appropriately and ensure that fauna are not injured during any clearing. They are also required to relay information to the machine operator/s and stop clearing activities in the area if a Koala is observed.
- Koalas are not to be physically removed from a tree to another location. In the event of a Koala being encountered within the clearing extent, works shall cease in the immediate vicinity to allow time for the fauna to voluntarily disperse. No Koalas are to be relocated but left to move on by their own means. If Koalas do not move on within 48 hours, the TMR Senior Environmental Officer is to be contacted for direction.
- Where Koalas are encountered within the disturbance footprint on the day of clearing, the tree will be flagged and a 30 m exclusion zone will be introduced around the tree/s and a strip of vegetation leading to the edge of the disturbance footprint will be left untouched until such time as the Koalas have moved away from the works area. At no time will a tree in which a Koala is present, or a tree with a crown overlapping a tree in which a Koala is present, be cleared. At the end of each day, the spotter/catcher is to ensure there is a clear passage for Koalas to leave the site, unimpeded by obstacles such as sediment and erosion control fencing.
- Should an animal (not limited to Koalas) be found sick or injured, contact must be made with a suitable treatment facility or an approved alternative wildlife handler. Any sick, injured or orphaned animals shall be reported by the Construction Contractor in the first instance to RSPCA Queensland via the 1300 ANIMAL 1300 264 625. This information will be provided to the relevant Queensland Parks and Wildlife Service (QPWS) Officer for the region.
- If a Koala is injured during clearing, works will cease and the Koala will be inspected by the fauna spotter/catcher to assess the extent of injury and determine appropriate treatment. Where injury is considered to be minor (for example, a minor abrasion) and the animal is otherwise alert and active, the animal may be released to reduce stress. If the animal is suffering injuries of a more intermediate nature, it will be immediately transported to:
    - Name Valley Vet Surgery
    - Phone 4959 2099
    - Address 14 Dutton St, Walkerston QLD 4751
- In the event that a wildlife carer is required, Fauna Rescue Whitsundays will be contacted:
    - Name Ian Gottke, Fauna Rescue Whitsundays
    - Phone 4947 3389 / 0459 362 911
    - Address PO Box 246, Cannonvale QLD 4802

Koalas can be difficult to see, even to the trained eye, and particularly when resting in the tops of tall leafy trees. Koalas can also jump from one tree to another. Consequently, continual surveillance of Koalas present on site is required for the duration of clearing operations to ensure against accidentally felling or interfering with a tree that has a resident Koala.

Spotter/catchers will be working on foot alongside operators during all clearing works, and will oversee the operation. At all time, fauna spotter/catchers will remain visible to, and clear of, operators and machinery. Communication will be achieved through the use of 2 way radios.

Where the Contractor observes conflicts between pest animals and native fauna, such as Koalas, TMR will be notified immediately and will liaise with DEHP and the fauna spotter/catcher regarding management measures.

4.1.2 Habitat Fragmentation and Connectivity

4.1.2.1 Potential Impacts of the Project

In general, roads have negative effects on species abundance by increasing mortality, reducing connectivity, reducing habitat size and quality and altering animal behaviour (Polak et.al, 2014). Habitat fragmentation and the associated decrease in connectivity between habitat areas which occurs can lead to an inhibition of gene flow between isolated populations and increases localised extinction risk (Holderegger & Di Giulio, 2010; Dudaniec et al, 2013).

The Peak Downs Highway and more specifically the Eton Range crossing, traverse a steeply sloped, north-running spur and associated gullies. The flanking terrain falls sharply to the west, north and east and includes steep slopes (>30%), low cliffs, steeply incised ephemeral gullies and valley floors. The upper slopes and crest of this spur tended to support dry sclerophyll woodland to open forest while closed scrubs to complex notophyll vine forest dominated the lower lopes and valley floor.

Dique et. al. (2003) recorded mean dispersal distances of 3.5 kilometres for Koala in SE Queensland with some individuals moving up to 10 km's during the breeding season. Given that potential Koala habitat exists either side of the Project area, it can be assumed with a reasonable degree of certainty that Koala would be traversing the Peak Downs Highway in the vicinity of the Project. The proposed increase in road footprint, including construction of dual carriageway, has the potential to present an increased barrier to koala dispersal.

The level of disturbance (ie. exotic flora) was found to be very high throughout much of the Project area (EcoSM, 2013), which increased along the edges of the existing highway and areas that have been cleared of remnant native vegetation for use as lay down areas, safety ramps or powerline easements. The gullies along the alignment are ephemeral and there are no permanent watercourses within the Project area.

Edge effects in the form of species and structure modification through increased light, windshear, weed invasion or changed species composition, is unlikely to be significant as a result of the Project given these effects are already acting on habitat either side of the existing Peak Downs Highway (EcoSM, 2013). The most likely edge effects will be an increase to the depth of edge effects, although new edges are unlikely to be created for this Project. The denser vine thicket community, represented by RE 8.12.3, will be most susceptible to edge effects, though this dense community is not known to support Koala habitat.

With the limited background information available, quantifying the potential scale and any change in this impact is extremely difficult, and there impact on habitat fragmentation and connectivity is therefore largely unknown.

4.1.2.2 Management and Mitigation Measures

The following management and mitigation measures will be incorporated into the construction contract documentation for the construction phase of the Project to minimise the impacts of habitat fragmentation and connectivity:

Minimise Clearing

As noted in Section 4.1.1, clearing will be limited to the disturbance area required for the construction and operation phases of the Project, and will be clearly defined in the Project contract documentation.

Rehabilitation and Revegetation

Temporary disturbance will be rehabilitated as quickly as possible following completion of construction and will be designed to meet site specific requirements.

Fauna Passage provisions

Design

The Project is approximately 3.756 km long, with a fauna underpass designed at CH 50,750 m. The dedicated fauna culvert has been designed and will be constructed in association with fauna fencing to direct fauna to a dedicated crossing point and prevent them from entering the highway road reserve at a location determined as having high Koala activity levels.

Across the site, appropriate habitat links will be maintained during clearing to allow Koalas living on the site to move out of the site. Fauna exclusion fencing will be installed as directed by the qualified fauna spotter/catcher. All other fencing must be fauna friendly, to allow movement into adjacent habitat. The direction of clearing will be generally away from the Peak Downs Highway, and towards vegetation being retained, to ensure Koalas are not pressured to cross the road or move through construction areas, and that Koalas can safely leave the site of clearing and relocate to adjacent habitat.

The fauna underpass and associated fencing has been designed to incorporate the following guidelines and standards:

- Koala-sensitive Design Guideline – A guide to Koala-sensitive design measures for planning and development activities (DEHP, 2012);
- Fauna Sensitive Road Design Volume 2 (TMR, 2010); and
- Fauna Exclusion Fence (Roads and Maritime NSW, 2009).

Detailed design drawings of the fauna culvert is attached in Appendix B, and Figure 8 displays the location of the fauna mitigation infrastructure. The fauna exclusion fencing ends at relatively steep cuts where the potential of koala movement is low. The extremely steep gradients on the northern extent of the Project are considered highly unlikely to act as a movement corridor. This is supported by the KSAT results of the Project area (SMEC, 2015).

Figure 7 displays an example 3D image of the road realignment and steep cuts, where the fauna exclusion fencing will not be present.

Figure 7: Indicative 3D image of Project road alignment and steep cuts

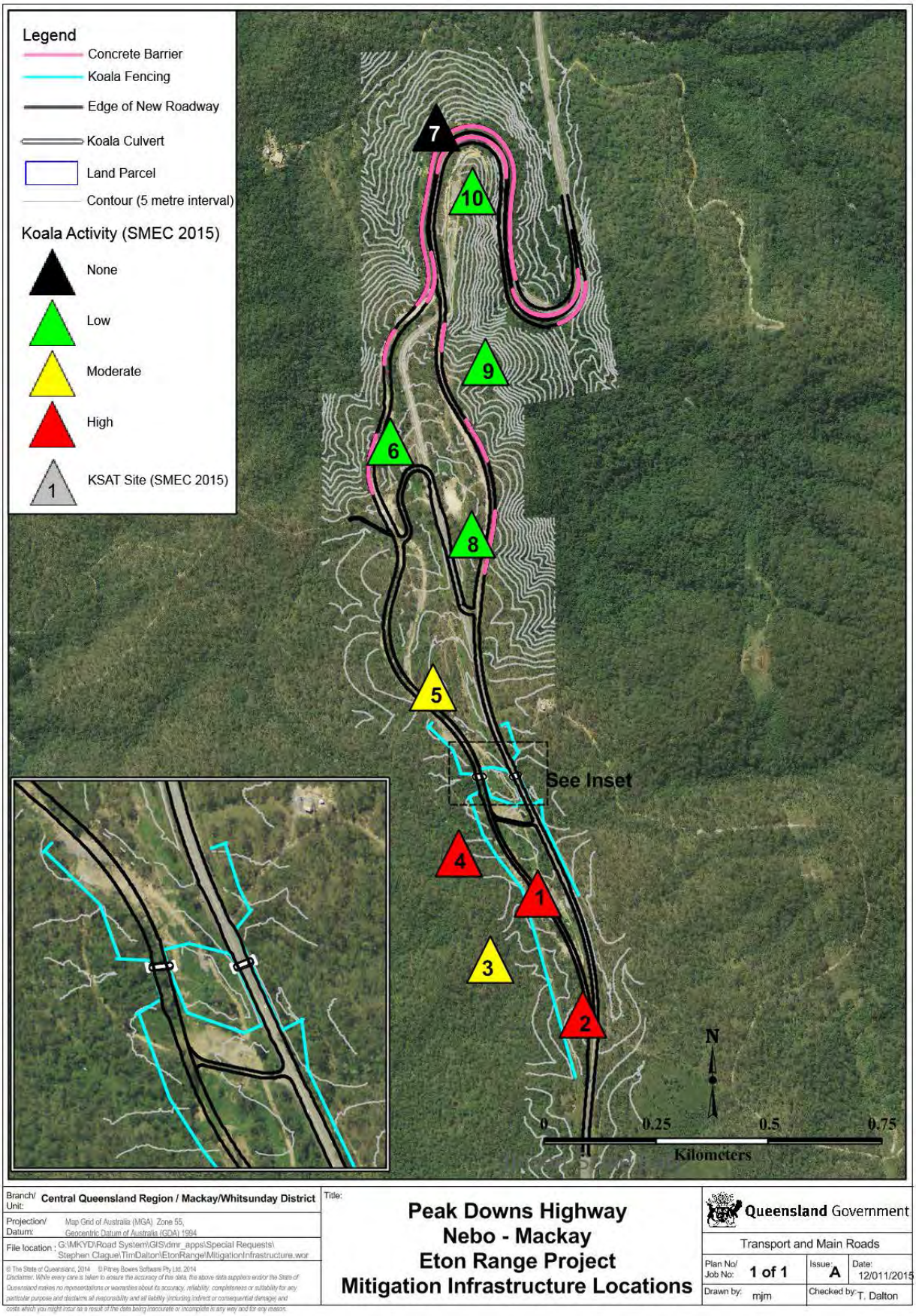

Figure 8: Mitigation Infrastructure Locations within Project

Monitoring

Wildlife cameras will be installed in and around the fauna culvert, and at key points along the fauna exclusion fences for post construction monitoring. These cameras will detect medium to large mammal activity, capturing still, or short video images once triggered. The data files will be checked manually to identify the species captured and to give some measure of the frequency of use by Koalas and other fauna. Cameras will be set to run for four one-month campaigns, including during Koala breeding season when animal activity is at a peak.

4.1.3 Vehicle Strike

4.1.3.1 Potential Impacts of the Project

Based on anecdotal evidence in the region, the history of Koala mortality from vehicle strike is not considered significant in the Project location, particularly on steep parts of the range. However, there is some evidence of Koala strike to the south of the Eton Range and it is likely that Koalas cross the existing Peak Downs Highway, given that scats were observed on both sides of the highway. There is a known significant Koala corridor 10km south-west of the project area where a significant number of Koala fatalities have been recorded on a stretch of the Peak Downs Highway (further discussed in Attachment 2). However, based on Koala home range size (White 1999, Ellis et al. 2009, Mitchell 1990), it is unlikely that the Koala population in the project area would be crossing at that location. The important crossing points are expected to be flatter sections of the highway at the top of the range (CH 49,800 – 51,200 m), where Koala activities were highest during ecological surveys.

Potential exists for an increase in Koala road mortality as a consequence of the upgrade. The Project will result in improved road conditions which is expected to see an increase in traffic numbers on this section of road over the next with the expected development of the Galilee Basin. This increased traffic volume is expected to increase the likelihood of vehicle strike to Koala. The existing carriageway will be duplicated, thus also increasing mortaility risk.

A study by Dique et.al. (2003) in SE Queensland found that increasing speed limits, resulted in a small increase in incidents of koala vehicle strike. However, there will not be any increase in posted speed limits in the Project area so this factor is considered unlikely to contribute to this potential impact.

4.1.3.2 Management and Mitigation Measures

Mitigation measures to minimise the risk of vehicle strike to Koalas include fauna fencing and a fauna crossing, as discussed in Section 4.1.1 and 4.1.2. As described in the original EPBC referral documentation, roadkill of the new section of the highway will be monitored by TMR for 2 years after completion of the Project.

Traffic Management

The installation of concrete barriers to prevent head-on collisions or errant vehicles going over the side has the potential to inhibit Koala movement across the road. However, the concrete barriers will be installed in areas with a steep gradient and where speed limits will be restricted to 60km/hr. Prevett et al. (1995) found that road kills occurred where vehicle speed exceeded 80km/hr and where wider habitat corridors or linear forests occurred on both sides of the road. A large majority of the proposed road (CH 50, 900 – 53, 000 m northbound, CH 51, 500 – 53, 000 m southbound) will be restricted to 60km/hr due to the steep and winding nature of the alignment.

Regulatory speed signage locations for operation of the road after construction are indicated in Figure 9 below.

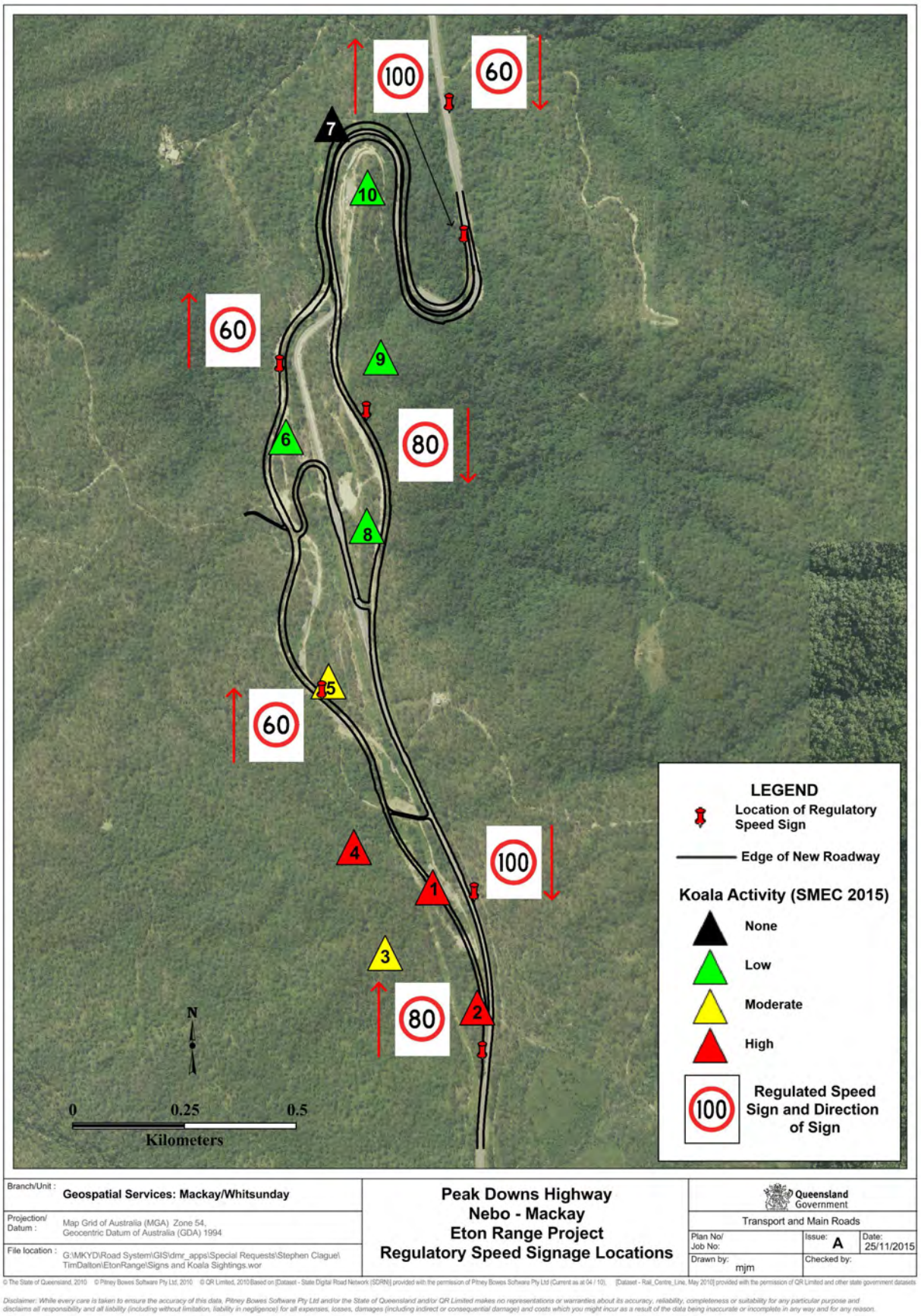

Figure 9: Regulatory Speed Signage Locations within Project

4.2 Indirect Impacts

4.2.1 Habitat Degradation

4.2.1.1 Potential Impacts of the Project

Field surveys in the Project area and surrounds have identified significant infestation of Lantana (*Lantana camara*) (a weed of national environmental significance) and other weeds that are declared under the Queensland *Land Protection (Pest and Stock Route Management) Act 2002.*

As mentioned in Section 4.1.2, edge effects are unlikely to increase as a result of the Project due to the significant weed invasion already occurring on habitat either side of the existing Peak Downs Highway. The Project is considered unlikely to result in any new invasive species becoming established in habitat areas adjacent to the Project area, as these invasive species are already established throughout the wider landscape.

There is potential for the spread of invasive weeds, such as Lantana, to occur during construction, degrading the habitat of the Koala through the suppression of sapling growth.

4.2.1.2 Management and Mitigation Measures

Requirements for weed management during construction have been incorporated into the Project contract documentation, to be implemented by the Construction Contractor. This will minimise the potential for Project derived weed impacts, and remove and dispose of existing weed material within the Project area utilising suitable methods to limit further spread. Weed management measures will include:

- Pre-clearing weed survey and reporting, documenting areas of existing weed infestation and identifying treatment and management requirements;
- Weed monitoring and reporting during construction, including any area subject to ground disturbance, including stockpiles;
- Washdown of vehicles and construction material prior to entering the construction zone;
- Weed hygiene protocols for material being transported into the site;
- Removal of invasive species using suitable techniques; and
- Conduct weed inspections as part of rehabilitation monitoring and reporting.

4.2.2 Disease and Pathogens

As noted in Section 3.4, the Koala is known to be susceptible to a number of diseases, including Chlamydia and Koala retrovirus. No data is available about the presence of these diseases in local Koala populations.

4.2.2.1 Potential Impacts of the Project

A significant factor impacting on Koala populations is the bacterial disease Chlamidiya (Polkinhorne, et.al., 2013). Two chlamydial species infect the koala, Chlamydia pecorum and Chlamydia pneumoniae, and have been reported in nearly all mainland koala populations. Chlamydial infections of koalas are associated with ocular infections leading to blindness and genital tract infections linked to infertility, among other serious clinical manifestations (Polkinhorne, et.al., 2013).

It has been suggested that the spread of these diseases is at least partially associated with stress placed on koala from a range of anthropogenic sources (McAlpine et.al., 2015). The Project has the potential to increase stress on Koala in the Project area through increases in noise, traffic movement, and disturbance of koala dispersal patterns.

No known published information exists on the disease status of the Koala populations in the vicinity of the Project area. With the absence of background information, quantifying any existing problem and predicting subsequent change in this impact is not possible.

4.2.2.2 Management and Mitigation Measures

Staged Clearing

Clearing will be staged in accordance with the requirements detailed in Section 4.1.1. This is to provide an opportunity for Koalas to move from the works site on their own accord and reduce the potential for increased stress and expression of chlamydia symptoms.

No additional mitigation measures for diseases and pathogens is recommended at this time as there is no formal translocation program of Koalas proposed as part of the Project that will require quarantine or other disease preventive measures.

Fauna Spotter/Catcher

Fauna management during clearing activities will include the engagement of a fauna spotter/catcher as outlined in Section 4.1.1. The fauna spotter/catcher will provide advice and monitor potentially stress inducing construction activities (vegetation clearing and noise) in proximity to areas where Koalas are observed. Any fauna injured/separated from parent/s during construction shall be promptly transported to a veterinarian for treatment. The Construction Contractor is to nominate contact details for approved local wildlife handler/s and local vet in the Environmental Management Plan (Construction) (EMP(C)).

Should an animal (not limited to Koalas) be found sick or injured, contact must be made with a suitable treatment facility or an approved alternative wildlife handler. Any sick, injured or orphaned animals shall be reported by the Construction Contractor in the first instance to RSPCA Queensland via the 1300 ANIMAL 1300 264 625. This information will be provided to the relevant Queensland Parks and Wildlife Service (QPWS) Officer for the region.

If a Koala is injured during clearing, works will cease and the Koala will be inspected by the fauna spotter/catcher to assess the extent of injury and determine appropriate treatment. Where injury is considered to be minor (for example, a minor abrasion) and the animal is otherwise alert and active, the animal may be released to reduce stress. If the animal is suffering injuries of a more intermediate nature, it will be immediately transported to:

- Name Valley Vet Surgery
- Phone 4959 2099
- Address 14 Dutton St, Walkerston QLD 4751

In the event that a wildlife carer is required, Fauna Rescue Whitsundays will be contacted:

- Name Ian Gottke, Fauna Rescue Whitsundays
- Phone 4947 3389 / 0459 362 911
- Address PO Box 246, Cannonvale QLD 4802

A populated fauna reporting register will be submitted to DEHP at the completion of the Project in line with State legislative requirements.

4.2.3 Wild Dog Attack

4.2.3.1 Potential Impacts of the Project

There is evidence of wild dogs on the Project area, however, no data regarding dog attacks is available for the Project area. Given the density of Koalas within and surrounding the Project area, dog attacks are not considered a key existing threat to the population.

Through vegetation removal and habitat fragmentation, the Project will result in an increase of open space and exposed vegetation community edges. Therefore there is potential for the increase in open space to amplify mortality rates of Koalas, due to an absence of sufficient shelter and escape options. Trees are required to provide refuge from predators.

4.2.3.2 Management and Mitigation Measures

Koala refuge poles will be installed at the dedicated fauna crossing. Rehabilitation at the fauna underpass will be undertaken as quickly as possible to restore habitat connectivity and cover, and re-establish habitat connections to enable Koalas and other fauna to move between the east and west.

As mentioned in Section 4.1.2, wildlife cameras will assist in monitoring the fauna mitigation structures to observe potential use of the structures and potential wild dogs if they are within the Project area.

4.2.4 Other Construction Related Activities

4.2.4.1 Potential Impacts of the Project

There is a potential risk of Koala mortality as a result of clearing activities during the Construction phase. This includes vehicle strike or impacts during tree felling.

Further, there is potential for indirect impacts to occur to Koala and Koala habitat from vegetation clearing including enhanced stress levels, and construction impacts as discussed below. This is particularly relevant in those areas where Koala usage has been identified during field surveys, or more generally in areas of suitable habitat.

Noise and vibration emissions will result from vegetation clearing, some blasting is also required in the creation of expanded carriageways and steep batters. Temporary or intermittent noise and vibration emissions will be associated with machinery and activity for construction of the Project. Consequently, depending on the magnitude of construction noise, there may be some bird and mammal species which may be repulsed by noise and therefore will forego utilisation of habitat within the noise disturbance zones (EcoSM, 2013). In the case of temporary noise associated with construction or clearing activities, native fauna are likely to return to the affected habitat areas within a short period of the noise emissions ceasing.

4.2.4.2 Management and Mitigation Measures

Mitigation and management measures to reduce the impacts to Koalas during construction are as follows:

- The preparation and implementation of an EMP(C) which incorporates the management measures identified in this FMP. The Construction Contractor will be required to prepare the EMP(C) for approval by the Contract Administrator prior to construction commencing and shall identify the likely impacts, procedures to follow and mitigation measures to be implemented;
- Provide environmental training to site personnel through a site induction and toolbox talks to identify species that may be encountered during construction, potential impacts, and the procedure to follow in the event an animal (including Koala) is encountered;
- Implement appropriate vehicle speed limits during construction to minimise the risk of vehicle strike and resultant mortality to Koala;
- Direct artificial construction lighting away from retained vegetation communities, particularly in association with areas identified as Koala habitat;
- Install fauna fencing as part of early construction works where practical and feasible to limit fauna from entering the works site and to demarcate no-entry zones. Temporary no-go fencing may be implemented where it is not practical to install permanent fencing until later in the construction process.

4.3 Cumulative Impacts

The potential impacts as discussed in earlier sections, habitat removal, habitat fragmentation, road mortality and increase in disease, do not operate in isolation. A seemingly minor increase in the scale of one environmental impact can lead to a consequential increase in the impacts of others (McAlpine et.al., 2006). In turn the cumulative effect of impacts can be influenced by naturally occurring events such as drought or bushfire. For example a temporary loss of habitat caused by a bushfire may result in increased Koala movement to more favourable habitat areas. If this increase in movement involves increased crossing of a road by Koala, then a subsequent increase in road mortality is possible. Equally, impacts

from other road projects or operations such as forestry in the area surrounding the Project, may result in increased cumulative project impacts.

The cumulative impacts arising from the fragmentation of Koala populations are less obvious and may take some time to fully manifest themselves. The extensive footprint of infrastructure projects, and the expansion of associated urban and peri-urban development which often follows, is often imposed on a landscape that typically has already been extensively cleared for agriculture (Melzer et al., 2013). The outcome is likely to be the loss of significant numbers of Koalas from otherwise stable populations through the fragmentation of populations, and the loss of populations in areas where roadkill is severe or where direct clearing reduces the carrying capacity of the local ecosystem. In the case of the Project these impacts are less likely given the proximity of extensive areas of State Forest and other protected areas containing extensive areas of potential Koala habitat.

Given the limited knowledge which exists of the Koala population in the Eton Range area generally and within the area surrounding the Project, it is difficult to estimate with any degree of reliability the quantum of additional impact which the Project may contribute to cumulative impacts on Koalas in the area. McAlpine et.al (2015), recommends that a strategic regional assessment approach is required that evaluates the potential cumulative impacts of multiple projects across all land uses.

Christian et. al. (2015) observed that impact assessments often focus on short-term behavioural responses of animals to human disturbance. However, the cumulative effects caused by repeated behavioural disruptions are of management concern because these effects have the potential to influence individuals' survival and reproduction. Christian et. al. (2015) also notes the need to estimate individual exposure rates to disturbance to determine cumulative effects. This approach to quantifying cumulative impacts has merit, but again in the case of the Project the lack of data relating to the Eton Range Koala population makes reliable assessment impossible and potential impacts therefore largely unpredictable.

Additional information regarding the regional Koala population should be a priority for future research and monitoring activities.

4.4 Mitigation, Management and Monitoring

The previously described management measures have been developed to mitigate potential impacts on Koalas during clearing works. As part of the site induction process, all staff who will be involved in clearing works will be made aware of the management measures to be implemented on site, and their responsibilities under the *Nature Conservation (Wildlife Management) Regulation 2006*. Failure to comply will result in the Contractor being responsible for any and all mitigation costs associated with the non-conformance.

Policy 6 of the *Nature Conservation (Koala) Conservation Plan 2006* outlines provisions relating to how Koala habitat trees are to be cleared to prevent injury of Koalas. Whilst Policy 6 is not applicable to this Project given its location outside south-east Queensland, the management measures within Policy 6 are considered to reflect best practice and therefore have been applied to ensure injury or harm of potentially resident Koalas is limited to the greatest extent possible.

A summary of all management actions for the Project is included below (Table 5). These management actions will also be included in the Contractor's EMP(C).

Table 5: Koala Management Actions

Measure ID	Management Action	Performance Indicator	Project Stage for Implementation	Responsible Party	Monitoring Requirement	Corrective Action
1	**Minimise Clearing**					
1.1	Minimise Project footprint and vegetation clearing extents necessary for construction.	No evidence of disturbance, vegetation clearing or removal of habitat beyond the designated clear and grub footprint and no-go zones.	Detailed Design	Designer/TMR	Daily inspections of the extent of works to be undertaken to ensure vegetation outside the Project footprint has not been impacted. Audit against design drawings and plans issued to Construction Contractor.	Install additional barriers to delineate no-entry zones and rehabilitate areas outside the planned disturbance immediately. Raise Work Improvement Note (WIN) as per TMR policy if required.
1.2	Define clearing and grubbing extents on drawings, including clearly defined no-entry zones.		Detailed Design	Designer/TMR		
1.3	Comply with the defined clear and grub extents (maximum removal of 30.867ha of Koala habitat for Project, including the undertaken trial works) and no-entry zones during construction.		Construction	Construction Contractor		
1.4	Conduct sequential clearing (as previously discussed) to provide fauna with the best opportunity to move from the works site on their own accord.	No evidence of clearing outside defined clearing limits.	Construction	Construction Contractor		
1.5	Do not clear trees with Koalas present, as well as trees that overlap with such trees, until the Koala has moved on.	No fauna injury or mortality as a result of construction.	Construction	Construction Contractor		
1.6	Limit the project construction footprint to the area required to construct the works.	No construction activities or disturbance beyond the prescribed extents.	Detailed Design	Designer/TMR		

Measure ID	Management Action	Performance Indicator	Project Stage for Implementation	Responsible Party	Monitoring Requirement	Corrective Action
1.7	Contain temporary access tracks within the defined clearing limits.	No access tracks beyond the defined clearing limits.	Construction	Construction Contractor		
2	**Fauna Fencing**					
2.1	Incorporate fauna exclusion fencing into the design at locations adjacent to habitat edges and within 100m of fauna crossing. Install fauna fencing as per RMS *Fauna Exclusion Fence* (NSW). Where early installation is not feasible or practical, temporary no-entry fencing will be installed and replaced with permanent fauna fencing on completion of works in an area. Maintain fauna fencing in accordance with the TMR Road Maintenance Performance Contract.	Fauna exclusion fencing installed as nominated on design drawings. No trees within 3m of any fauna fences. No increased mortality of Koalas as a result of vehicle strike. Fauna fencing integrity is maintained, including clear zones.	Detailed Design	Designer/TMR Construction Contractor TMR/Maintenance Contractor	Inspect and report on fauna fencing regularly during construction. Implement and report on camera monitoring of fauna culvert and associated fauna exclusion fencing to determine effectiveness of designed passageway.	Repair damage to fences. Maintain clear zones free of woody vegetation. Install additional fencing where required.
2.2	Maintain fauna crossing structure and fauna furniture. Install wildlife cameras in the fauna culvert and at key points along the fauna exclusion fences for post construction monitoring	No evidence of damage to fauna exclusion fencing, crossings or furniture evident.	Operation	TMR		
3	**Fauna Passage**					
3.1	Reinstate habitat connectivity, through provision of fauna passage	Fauna passage constructed in	Detailed Design/ Construction/	Designer/TMR/	Inspect fauna crossings (including dedicated fauna	Clear blockages.

Measure ID	Management Action	Performance Indicator	Project Stage for Implementation	Responsible Party	Monitoring Requirement	Corrective Action
	at recommended location and rehabilitation of adjacent habitat within the Project area. Maintain fauna crossing in accordance with the TMR Road Maintenance Performance Contact. Monitor highway Roadkill for 2 years after completion of the Project	accordance with Project designs. Rehabilitation works completed and monitored in accordance with the Project contract documentation. Fauna crossing function is maintained, no blockages.	Operation	Construction Contractor	culverts) regularly and maintain in accordance with the Maintenance Contract. Implement camera monitoring of fauna culvert and associated fencing to determine effectiveness of designed passage way. Monitor road kill on the Eton Range crossing for 2 years after the Project.	Install additional fencing where required. Raise Work Improvement Note (WIN) as per TMR policy if required, to determine corrective action.
3.2	Retain vegetation and Koala habitat where possible	No construction activities or disturbance beyond the prescribed extents.	Detailed Design/ Construction	Designer/TMR/ Construction Contractor		
3.3	Generally direct clearing away from the Peak Downs Highway, and towards vegetation being retained, to ensure Koalas are not pressured to cross the road or move through construction areas, and that Koalas can safely leave the site of clearing and relocate to adjacent habitat.	No fauna injury or mortality as a result of construction.	Construction	Construction Contractor	Daily Construction Contractor inspections	Raise Work Improvement Note (WIN) as per TMR policy if required.
4	**Fauna Spotter/Catcher**					
4.1	Conduct pre-clearing surveys immediately before	Pre-clearing and post-clearing reporting,	Construction	Construction Contractor	Ensure that fauna spotter/catchers are on	Stop work and gain clearance from a suitably qualified

Measure ID	Management Action	Performance Indicator	Project Stage for Implementation	Responsible Party	Monitoring Requirement	Corrective Action
	construction activities commence in an area.	documenting any actions required to move fauna on from the clearing zone. Clearing activities do not result in fauna injury or mortality.			site during clearing vegetation. Fauna spotter/catcher reports are to be submitted to the Contract Administrator Site audits of Construction Contractor.	fauna during clearing vegetation spotter/catcher before works are resumed. Raise Work Improvement Note (WIN) as per TMR policy if required.
4.2	Engage and have present a licensed fauna spotter/catcher during all vegetation clearing activities. Should a Koala be identified, construction is to stop in that area and wait for the Koala to move of its own accord. The fauna spotter/catcher will prepare and submit a post-clearing report to the Contract Administrator no later than 14 days following completion of clearing in an area.		Construction	Construction Contractor		
5	**Management of Construction Related Activities**					
5.1	Implement construction vehicle speed limits in the Project area.	No vehicles travelling above the signed speed limits. Speed limit signs evident in the construction area. No Koalas struck by vehicle during the construction phase.	Construction	Construction Contractor	Monitor any fauna vehicle strikes through construction	Raise Work Improvement Note (WIN) as per TMR policy if required, to determine corrective action.

Measure ID	Management Action	Performance Indicator	Project Stage for Implementation	Responsible Party	Monitoring Requirement	Corrective Action
5.2	Provide environmental training to construction staff including training on the procedure to follow in the event of a Koala (alive, sick or injured) being encountered.	No deviations from the requirements of the procedure to follow.	Construction	TMR/Construction Contractor	Site audits of Construction Contractor.	
5.3	Prepare and implement an EMP(C), which incorporates the management measures identified in this Fauna Management Plan.	No deviations from the requirements prescribed in the EMP(C). No fauna injury or mortality as a result of construction.	Construction	TMR/Construction Contractor	Site audits of Construction Contractor.	Raise Work Improvement Note (WIN) as per TMR policy if required, to determine corrective action.
5.4	Direct artificial light during construction and operation away from retained vegetation communities where possible	Lighting is directed away from habitat areas.	Construction	Designer/TMR/ Construction Contractor	Site audits of Construction Contractor.	
6	**Weed Management**					
6.1	Implement weed management as part of the EMP(C) including: • Pre-clearing weed survey and reporting, documenting areas of existing weed infestation and identifying treatment and management requirements • Weed monitoring and reporting during construction, including any area subject to	Pre-clearing weed survey and reporting documents requirements for treatment and management, which are implemented and reported on in accordance with the contract documentation throughout the construction and post construction phase. No increase in weed spread	Construction/ Operation	TMR/Construction Contractor/ Maintenance Contractor	Conduct daily monitoring during clearing activities to ensure weeds are being correctly removed and treated and vehicles are being suitably washed down. Conduct regular inspections in accordance with the contract documents during the defects liability period.	Implement additional weed management controls

Measure ID	Management Action	Performance Indicator	Project Stage for Implementation	Responsible Party	Monitoring Requirement	Corrective Action
	ground disturbance, including stockpiles • Washdown of vehicles and construction machinery prior to entering the construction zone • Weed hygiene protocols for material being transported into the site • Removal of invasive species using suitable techniques • Conduct weed inspections as part of rehabilitation monitoring and reporting.	across the Project area that can be attributed to construction activity or negligence.				
7	**Rehabilitation and Revegetation**					
7.1	Rehabilitate temporary disturbance areas as quickly as possible following completion of construction, including revegetation with suitable species where relevant. Target early rehabilitation at areas adjacent to fauna crossing structure.	No evidence of bare ground within disturbed areas after construction activities are complete. Rehabilitation undertaken in accordance with contract specifications.	Construction	TMR/Construction Contractor/ Maintenance Contractor		Undertake additional rehabilitation/revegetation if required. Raise Work Improvement Note (WIN) as per TMR policy if required, to determine corrective action.

5. Environmental Risk Assessment

5.1 Introduction

An Environmental Risk Assessment (ERA) has been undertaken to identify the potential impacts to the Koala as a result of the Project. Furthermore, this assessment is provided to assess the effectiveness of the proposed mitigation and management measures proposed in this FMP.

The methodology for the ERA has adopted the general principles outlined in *Australian Standard AS/NZ4360:1999 Risk Management and Environmental Risk Management – Principles and Process* (Standards Australia, 2000), and the risk assessment framework outlined in the DoE's *Environmental Management Plan Guidelines* (2014b). The ERA involves the following key steps:

- Establish the context for the risk assessment;
- Identify environmental risks to the Koala;
- Analyse risks, with mitigation and management measures in place;
- Evaluate risks to determine if the level of residual risk is acceptable; and
- Consider the ERA outcome against the DoE's *Significant Impact Guidelines* (2013), which is documented for the *Residual Impact Assessment and Offsets Proposal* (Attachment 2).

5.2 Risk Assessment Framework

The ERA has been completed in accordance with the EPBC Act Environmental Management Plan Guidelines (DoE, 2014b). The Guidelines detail individual ratings which are assigned to the likelihood and consequence of each impact, with reference to the criteria below. The ratings of these two factors together determines the final risk rating (refer to Table 6). This risk evaluation method is based on *AS/NZS ISO 31000:2009 Risk management – Principles and guidelines* (Standards Australia 2009) which contains further guidance.

Criteria for the likelihood of impact occurrence:

- Highly likely – is expected to occur in most circumstances;
- Likely – will probably occur during the life of the Project;
- Possible – might occur during the life of the Project;
- Unlikely – could occur but considered unlikely or doubtful; and
- Rare – may occur in exceptional circumstances.

Criteria for the consequence of the impact:

- Minor – minor incidence of environmental damage that can be reversed;
- Moderate – isolated but substantial instances of environmental damage that could be reversed with intensive efforts;
- High – substantial instances of environmental damage that could be reversed with intensive efforts;
- Major – major loss of environmental amenity and real danger of continuing; and
- Critical – severe widespread loss of environmental amenity and irrecoverable environmental damage.

Table 6: Risk Rating Table

	Consequence				
	Minor (1)	**Moderate (2)**	**High (3)**	**Major (4)**	**Critical (5)**
Highly Likely (5)	Medium (5)	High (10)	High (15)	**Severe** (20)	**Severe** (25)
Likely (4)	**Low (4)**	Medium (8)	High (12)	High (16)	**Severe** (20)
Possible (3)	**Low (3)**	Medium (6)	Medium (9)	High (12)	**Severe** (15)
Unlikely (2)	**Low (2)**	**Low (4)**	Medium (6)	High (8)	High (10)
Rare (1)	**Low (1)**	**Low (2)**	**Low (3)**	Medium (4)	High (5)

5.3 Environmental Risk Assessment

Table 7 provides an assessment of the potential impacts in accordance with the risk assessment framework outlined above. A residual risk rating of 'low' is deemed to be an acceptable risk, and indicates that the proposed mitigation measures are considered to be appropriate to the quantum of the risk.

Table 7: Environmental Risk Assessment, Koala

Impact Category	Potential Impact	Phase	Likelihood	Consequenc	Risk Rating	Mitigation/Management Measures	Likelihood	Consequenc	Residual
Habitat Removal	Direct habitat removal of a maximum of 30.867 ha Koala habitat	Construction	5	3	15	Minimise clearing extents. Staged and sequential clearing. Retention of vegetation within the future road reserve that is not immediately required to be cleared for construction, where practical. Fauna fencing and no-entry fencing to define clearing limits during construction. Fauna spotter/catcher surveys, monitoring and reporting.	5	2	10
Habitat Fragmentation and Connectivity	Habitat fragmentation and removal of fauna movement corridors	Design	4	3	12	Minimise clearing extents. Staged and sequential clearing. Retention of vegetation, where practical. Rehabilitation and revegetation of disturbed areas. Incorporation of fauna crossing. Inclusion of fauna furniture at the dedicated fauna culvert.	3	2	6
Habitat Degradation	Indirect effects of habitat removal and vegetation clearing e.g. edge effects and habitat degradation.	Construction	3	2	6	Minimise clearing extents. Weed management.	2	1	3
Diseases and Pathogens	Increased risk of disease or pathogens, through introduction or spread	Operation	2	3	6	Staged and sequential clearing. Fauna Spotter/Catcher. Implement a protocol for identification and management of sick or injured animals. Provide training to construction staff on the protocol to follow if a sick animal is encountered.	1	3	3
Vehicle Strike	Increased mortality through vehicle strike	Operation	4	3	12	Pre-clear survey, staged and sequential clearing. Establishment of no-entry zones. Implementation of speed limits for construction vehicles and plant. Majority of new highway is 60 km/hr.	1	3	3

Impact Category	Potential Impact	Phase	Likelihood	Consequenc	Risk Rating	Mitigation/Management Measures	Likelihood	Consequenc	Residual
Wild Dog Attack	Increased mortality through predation e.g. wild dog attack	Operation	3	4	12	Provision of fauna furniture, such as refuge poles, at the dedicated fauna culvert.	2	2	4

The outcome of the environmental risk assessment, documented in Table 7, shows that of the residual risks remaining after mitigation is applied, **habitat removal** for the Koala is the only residual risk rated as 'high', which cannot be effectively mitigated to a risk rating of 'low'. **Habitat fragmentation and connectivity** has been rated as 'moderate', which also cannot be mitigated to a risk rating of 'low'.

The *Residual Impact Assessment and Offsets Proposal* (Attachment 2) considers the potential impacts identified in this environmental risk assessment against the DoE's *Significant Impact Guidelines* (2013), with a focus on those that are unable to be sufficiently mitigated to a 'low' rating.

6. Project Requirements

6.1 Environmental Roles and Responsibilities

6.1.1 Department of Transport and Main Roads

TMR are the proponents and asset manager of the Project. With respect to this FMP it is the responsibility of TMR to ensure that:

- Appropriate fauna management and mitigation measures are included in the design;
- The requirements of the FMP are included in the tender documents for construction;
- The Construction Contractor complies with the requirements of the FMP;
- All activities are verified and reported to the relevant statutory authorities;
- Incidents relating to fauna are reported to relevant government agencies, where necessary;
- Report and monitor any non-compliance and review management procedures, where necessary; and
- Manage remediation actions to correct incidents of non-conformance.

6.1.2 Construction Contractor

The key responsibilities of the Construction Contractor in relation to the FMP include:

- Prepare and implement the EMP(C);
- Undertake the works in accordance with the FMP and ensure implementation of the FMP requirements;
- Undertake the works in accordance with the conditions of the contract including the Transport and Main Roads Specifications MRTS51 Environmental Management and the EMP(C);
- Appoint a suitably experienced, licensed fauna spotter/catcher to conduct pre-clearing surveys, monitor clearing activities, and to prepare pre-clearing and post-clearing reports;
- Inform all staff and sub-contractors of their environmental obligations;
- Report, monitor and act on any non-compliance and review management procedures where necessary; and
- Adhere to relevant requirements of state and federal legislation.

6.2 Reporting Requirements

The Contractor is required to prepare a monthly report for TMR detailing any incidents of environmental nuisance and non-conformance in accordance with Clause 7.4 of MRTS51 – *Environmental Management*. TMR has a responsibility to report all major environmental incidents that risk causing environmental harm to DEHP under the *Environment Protection Act 1994*.

Pre-clearance and post-clearance fauna survey reports by the spotter/catcher will be provided as part of the monthly environmental reports during vegetation clearing works.

Auditing and compliance tracking of the Project will be undertaken by TMR. Any non-compliance with the requirements of the management plan is to be documented, along with details of the corrective actions undertaken.

A populated fauna reporting register is to be submitted to DEHP at the completion of the Project. Reporting will also be consistent with any reporting commitments to DoE required under the conditions of approval.

6.3 Environmental Training

Site staff will be required to undergo environmental training through site inductions prior to commencing work on site. This is to include a briefing on environmental legislative requirements, the requirements of the FMP, conditions of approval, potential impacts, corrective actions and reporting requirements throughout the Construction phase, particularly concerning Koalas.

Regular toolbox talks will also be used to discuss conservation significant species that may occur, no-go zones and any other sensitive areas that are present within or adjacent the Project area. The Construction Contractor will maintain records of all conducted training.

6.4 Emergency Contracts and Procedures

The EMP(C) for the Project will be required to identify the key emergency contacts that are to be notified in the event of an environmental emergency. These personnel may stop works and provide directions to effectively manage emergencies.

Furthermore, the EMP(C) will outline the procedures that are to be complied with in the management of emergencies and will include measures that ensure these procedures are implemented and maintained throughout the construction of the Project.

7. References

Christiansen, F., Bertulli, C., Rasmussen, M., and Lusseau, D. (2015). *Estimating Cumulative Exposure of Wildlife to Non-Lethal Disturbance Using Spatially Explicit Capture-Recapture Models*. Journal of Wildlife Management 79, v2.

de Villiers, D., (2015). *The Role of Urban Koalas in Maintaining Regional Population Dynamics of Koalas in the Koala Coast PhD Thesis*, The University of Queensland, Brisbane.

DERM (2009). *Decline of the Koala Coast Koala population: population status in 2008*. Queensland Department of Environment and Resource Management, Brisbane.

DEHP (2012). *Koala-sensitive Design Guideline: A guide to Koala-sensitive design measures for planning and development activities*, Department of Environment and Heritage Protection, Brisbane.

DEHP (2015). *Wildlife Online Extract*. Department of Environment and Heritage Protection, Brisbane. Available at: https://environment.ehp.qld.gov.au/report-request/species-list/

DoE (2014a). *EPBC Act Referral Guidelines for the vulnerable Koala*. Department of Environment, Canberra

DoE (2014b). *Environmental Management Plan Guidelines*, Department of Environment, Canberra. Available at: http://www.environment.gov.au/system/files/resources/21b0925f-ea74-4b9e-942e- a097391a77fd/files/environmental-management-plan-guidelines.pdf.

DoE (2015a). *Species Profile and Threats Database*. Department of Environment, Canberra. Available at: http://www.environment.gov.au/sprat

DoE (2015b). *EPBC Act Environmental Offsets Policy*, Department of Environment, Canberra. Available at: http://www.environment.gov.au/epbc/publications/epbc-act-environmental-offsets-policy

DTMR (2010). *Fauna Sensitive Road Design Manual,* volume 2. Department of Transport and Main Roads, Brisbane.

Dique, D., Preece, H., Thompson, J. and de Villiers, D. (2004). *Determining the distribution and abundance of a regional Koala population in south-east Queensland for conservation management*. Wildlife Research 31. Pp. 109-117.

Dique, D., Thompson, J., Preece, H., Penfold, G., de Villiers, D., and Leslie, R., (2003). *Koala Mortality on Roads in South-East Queensland: The Koala Speed-Zone Trial*. Wildlife Research 30. Pp. 419–26.

Dudaniec, R., Rhodes, J.R., Worthington Wilmer, J., Lyons, M., Lee, K., McAlpine, C. and Carrick, F. (2013). *Using multi-level models to identify drivers of landscape genetic structure among management areas*. Molecular Ecology, 22, Pp. 3752–3765

EcoSM (2011). *Eton Range Upgrade Project – Options W1A-W2A and X1A-X2A.* Report prepared for Department of Transport and Main Roads. Ecological Survey & Management, Brendale

EcoSM (2009). *Ecological Assessment Report Peak Downs Highway Realignment Eton Range Crossing.* Report prepared for Department of Transport and Main Roads. Ecological Survey & Management, Brendale.

EcoSM (2013). *Eton Range Realignment Project Fauna Assessment Report*. Report prepared for Department of Transport and Main Roads. Ecological Survey & Management, Brendale.

Ellis, W., Bercovitch, F., FitzGibbon, S., Melzer, A., de Villiers, D. and Dique, D. (2010). *Koala birth seasonality and sex ratios across multiple sites in Queensland, Australia*. Journal of Mammalogy, **91**. Pp. 177-82

Ellis, W., Melzer, A., and Bercovitch, F. (2009). *Spatiotemporal dynamics of habitat use by Koalas: the checkerboard model*, Behavioral Ecology and Sociobiology 63: Pp. 1181-1188.

Ellis, W., Melzer, A., Carrick, F. and Hasegawa, M. (2002), *Tree use, diet and home range of the Koala (Phascolarctos cinereus) at Blair Athol, central Queensland*. Wildlife Research 29: Pp. 303-311.

Eyre, T.J., Kelly, A.L, and Neldner, V.J. (2008). *BioCondition: A Terrestrial Vegetation Condition Assessment Tool for Biodiversity in Queensland*. Field Assessment Manual. Version 1.6. Environmental Protection Agency (EPA), Biodiversity Sciences unit, Brisbane.

Fahrig, L. (2001). *How Much Habitat Is Enough?*, Biological Conservation 100, no. 1. Pp. 65–74.

Fahrig, L. (2002). *Effect of Habitat Fragmentation on the Extinction Threshold: A Synthesis*. Ecological Applications 12, no. 2. Pp. 346–53.

Holderegger, R. & Di Giulio, M. (2010). *The genetic effects of roads: a review of empirical evidence. Basic and Applied Ecology*, 11. Pp. 522–531.

Lassau, S., Ryan, B., Close, R., Moon, C., Geraghty, P., Coyle, A. and Pile, J. (2008). *Home ranges and mortality of a roadside Koala Phascolarctos cinereus population at Bonville, New South Wales*. Too Close for Comfort: Contentious Issues in Human-Wildlife Encounters. Pp. 127-136.

McAlpine, C., Rhodes, J., Callaghan, J., Bowen, M., Lunney, D., Mitchell, D., Pullar, D., and Possingham, H. (2006). *The Importance of Forest Area and Configuration Relative to Local Habitat Factors for Conserving Forest Mammals: A Case Study of Koalas in Queensland, Australia*. Biological Conservation 132, no. 2

McAlpine, C., Bowen, M., Callaghan, J., Lunney, D., Rhodes, J., Mitchell, D., Pullar, D., Poszingham, H. (2006), *Testing Alternative Models for the Conservation of Koalas in Fragmented Rural–urban Landscapes*. Austral Ecology 31, no. 4. Pp. 529–44.

McAlpine, C., Lunney, D., Melzer, A., Menkhorst, P., Phillips, S., Phalen, D., Ellis, W., et al. (2015). *Conserving Koalas: A Review of the Contrasting Regional Trends, Outlooks and Policy Challenges*. Biological Conservation 192. Pp. 226–36.

McLean, N. (2003). *Ecology and management of overabundant Koala (Phascolarctos cinereus) populations*. Thesis. University of Melbourne.

Melzer, A., Ellis, W., Fitzgibbon, S., Carrick, F., (2013). *Regional planning for central Queensland koalas: a framework for planning*. The Koala Research Centre of Central Queensland, Central Queensland University, Rockhampton, Queensland, Pp. 130–133.

Natural Resource Management Ministerial Council (NRMMC) (2009). *National Koala Conservation and Management Strategy 2009-2014*, Department of the Environment, Water, Heritage and the Arts. Canberra.

Phillips, S. and Callaghan, J. (2011). *The Spot Assessment Technique: a tool for determining localised levels of habitat use by Koalas Phascolarctos cinereus,* Zoologist v35(3). Pp. 774-780

Polak, T., Rhodes, J., Jones, D., and Possingham, H. (2014). *Optimal Planning for Mitigating the Impacts of Roads on Wildlife*. Journal of Applied Ecology 51, no. 3. Pp. 726–34.

Polkinghorne, A., Hanger, J., and Timms, P. (2013). *Recent Advances in Understanding the Biology, Epidemiology and Control of Chlamydial Infections in Koalas*. Veterinary Microbiology 165, no. 3–4. Pp. 214–23.

Prevett, P. T., Pope, R., Callaghan, J., and Bailey, L. (1995). *The Management and Research of Non-urban Koala Populations*, Central Queensland University. Pp 94-97.

SMEC (2015). *Eton Range Realignment Project, Field Survey Report for Matters of National Environmental Significance.* Report prepared for the Department of Transport and Main Roads.

Threatened Species Scientific Committee (TSSC) (2012). *Listing advice for Phascolarctos cinereus (Koala),* Australian Government.

Appendix A: Fauna Fencing Standards (RMS, 2009)

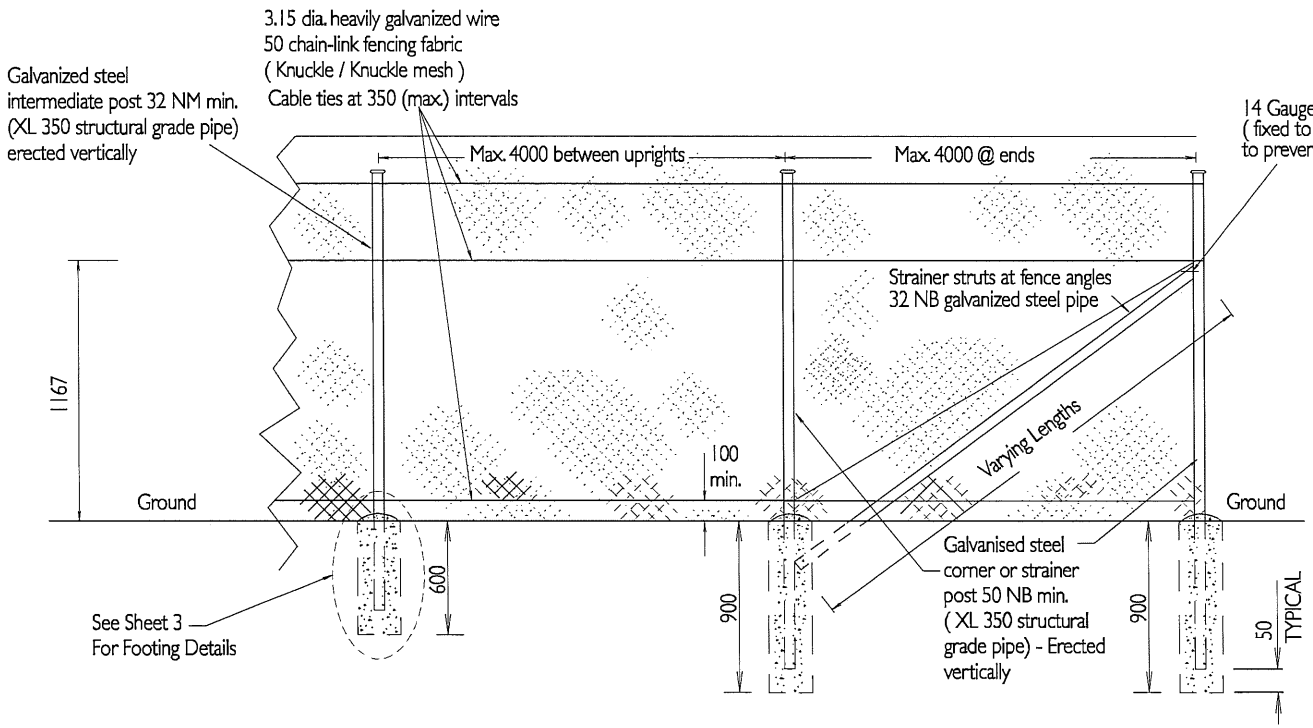

ELEVATION

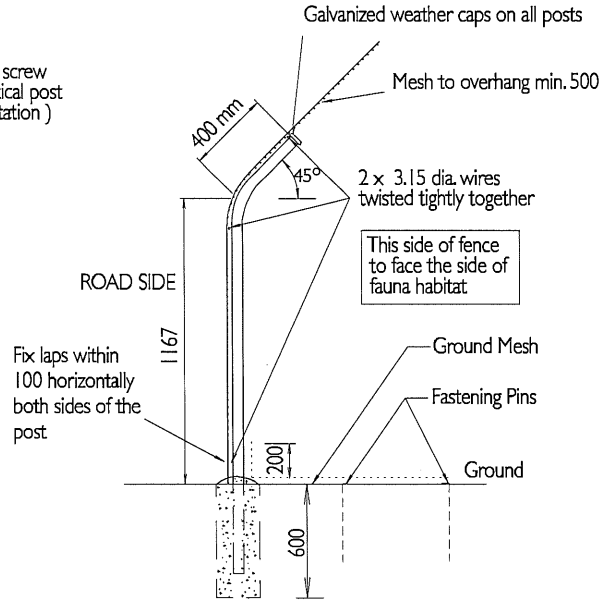

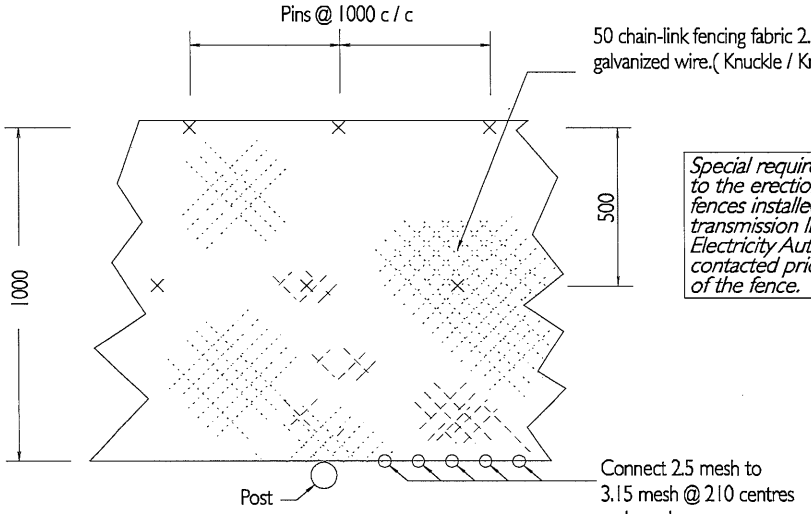

GROUND MESH FIXING DETAIL

Special requirements may apply to the erection procedures for fences installed near high voltage transmission lines. The relevant Electricity Authority should be contacted prior to the installation of the fence.

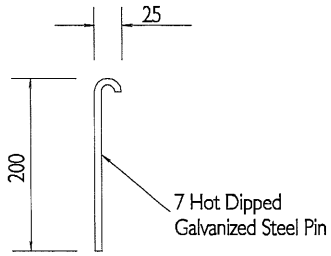

NOTE

For loose or sandy soils
350 (min.) galvanised
fastening pins must be used

FASTENING PIN DETAIL

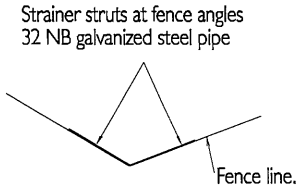

PLAN OF FENCE ANGLE

NOTE

Min internal angle 135°

All dimensions are in millimetres unless otherwise shown.

AMENDMENT DETAILS	DATE

Roads and Traffic Authority, NSW

FAUNA EXCLUSION FENCE

SCALE	No. OF SHEETS	SHEET No.
N.T.S	3	1

DRAWING NUMBER

MD.R201.D02.A

First Issued : July 2009

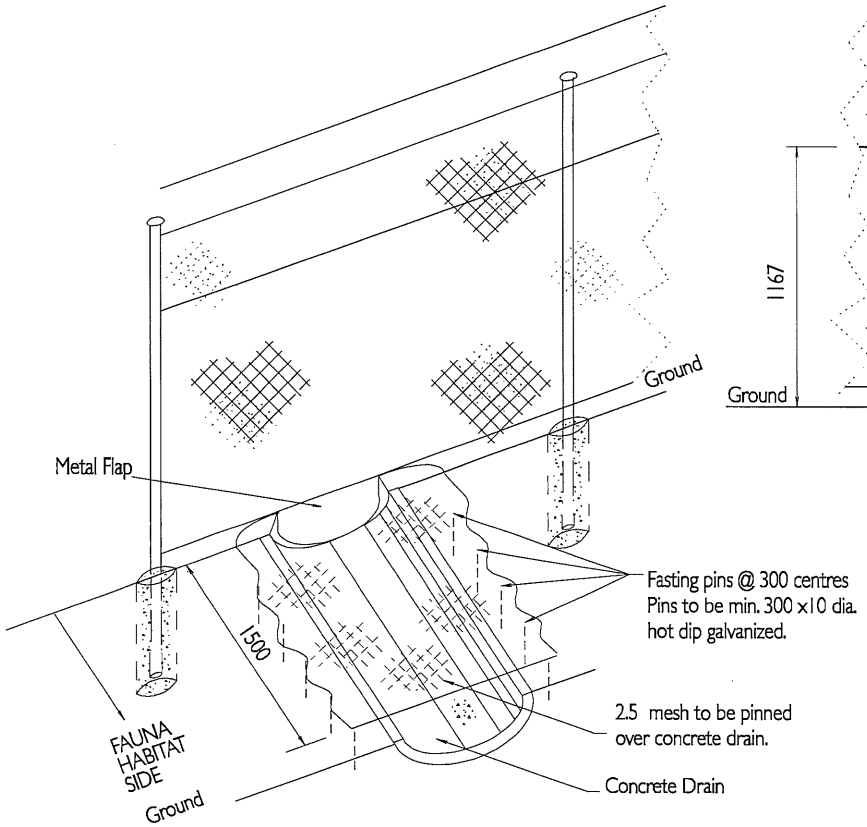

FAUNA PROTECTION DRAINAGE DETAILS

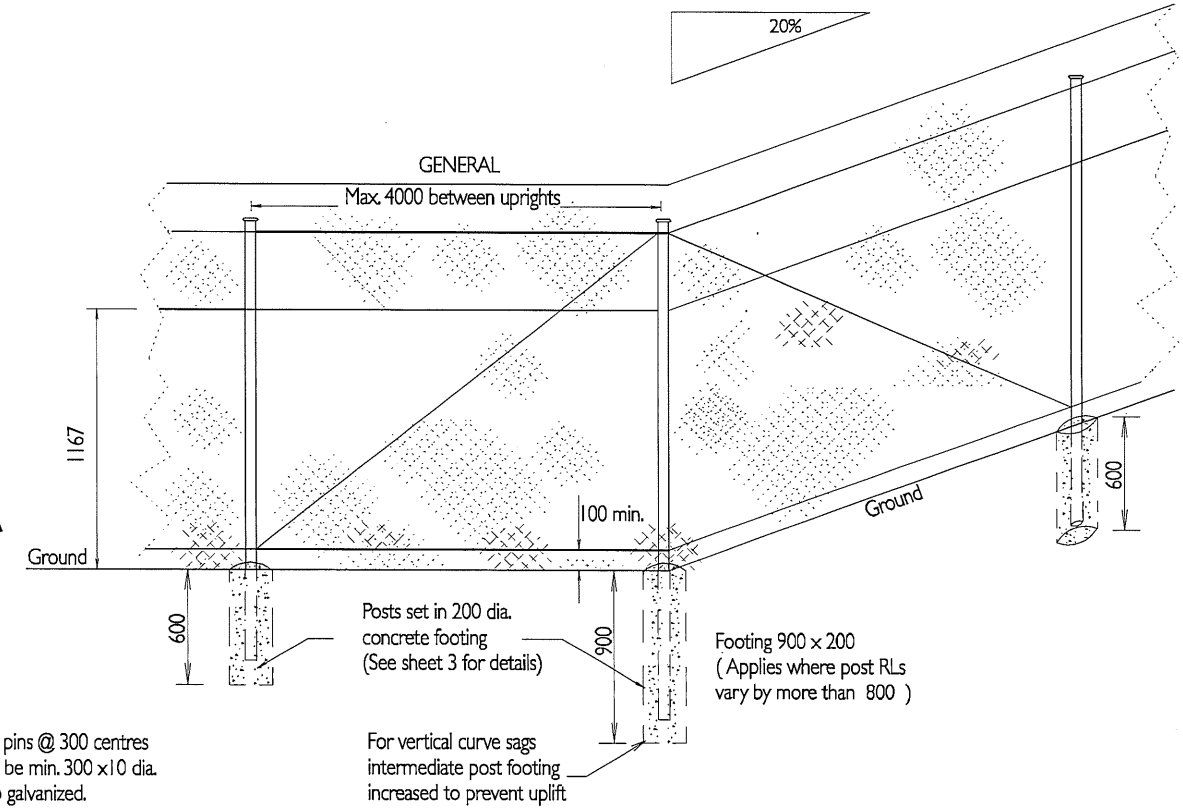

ELEVATION

INTERMEDIATE POST AT LOW POINT

NOTE

At drainage lines and gates light corrosion - resistant metal flap to be installed with less than 50 gap.
Flap to be designed to suit hydraulic flows and drain shape in stormwater flow paths.
Metal flap to be connected to fence on downstream side of fence.

Special requirements may apply to the erection procedures for fences installed near high voltage transmission lines. The relevant Electricity Authority should be contacted prior to the installation of the fence.

All dimensions are in millimetres unless otherwise stated.

AMENDMENT DETAILS	DATE

Roads and Traffic Authority, NSW

FAUNA EXCLUSION FENCE

SCALE	No. OF SHEETS	SHEET No.
N.T. S	3	2

DRAWING NUMBER

MD.R201.D02.A

First Issued : July 2009

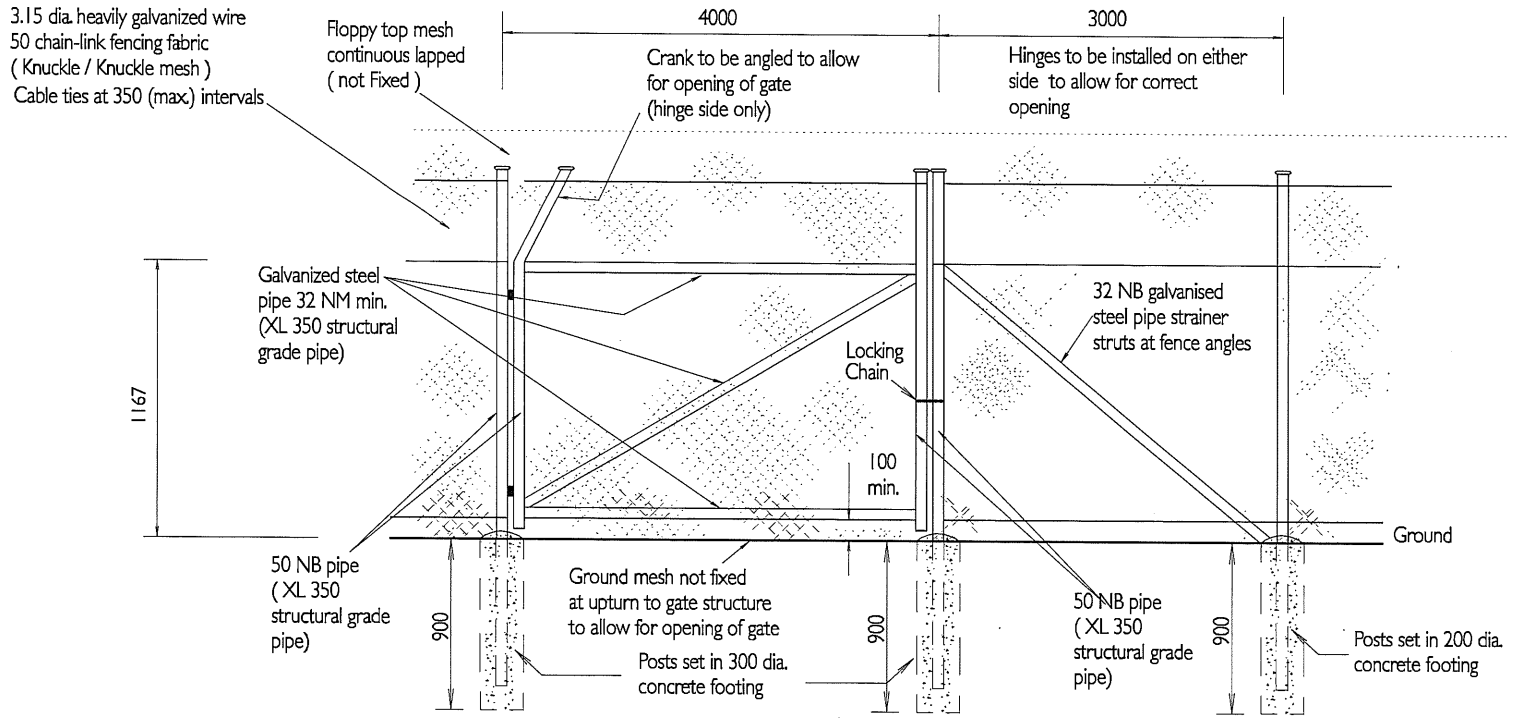

MAINTENANCE GATE DETAILS

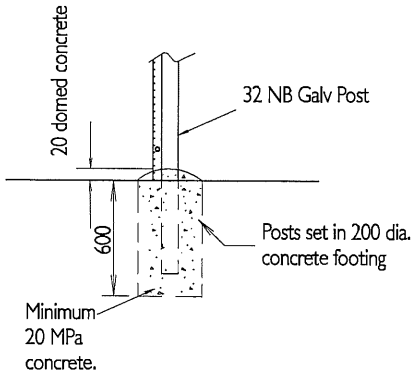

INTERMEDIATE POSTS
FOOTING DETAILS

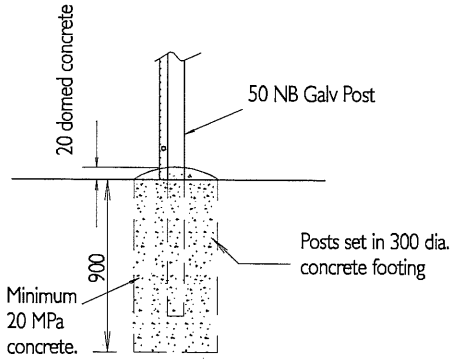

STRAINER & CORNER
POSTS FOOTING DETAILS

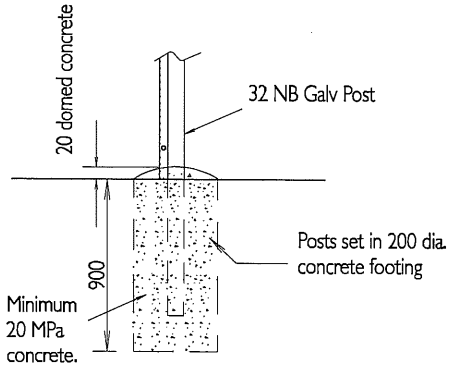

INTERMEDIATE POSTS
FOOTING DETAILS
AT LOW POINT

Special requirements may apply to the erection procedures for fences installed near high voltage transmission lines. The relevant Electricity Authority should be contacted prior to the installation of the fence.

All dimensions are in millimetres unless otherwise shown.

AMENDMENT DETAILS	DATE

Roads and Traffic Authority, NSW

FAUNA EXCLUSION FENCE
WITH GATE

SCALE	No. OF SHEETS	SHEET No.
N.T. S	3	3

DRAWING NUMBER

MD.R201.D02.A

First Issued : July 2009

Appendix B: Design Drawings, Fauna Mitigation Measures

NOT FOR CONSTRUCTION

AECOM

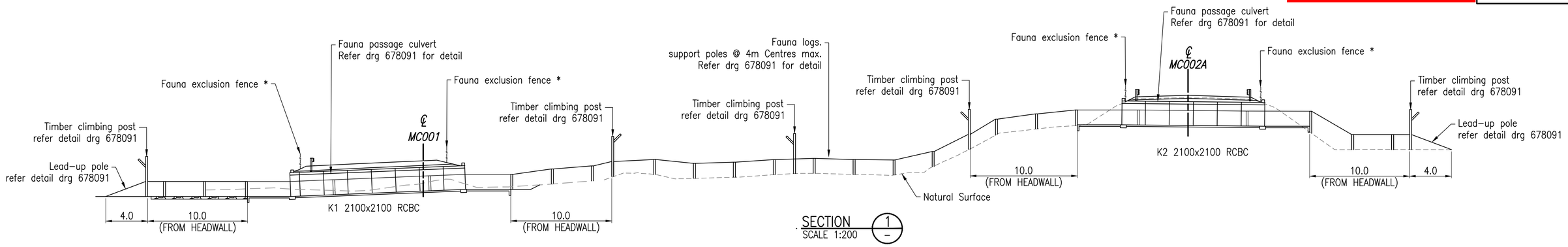

SECTION 1
SCALE 1:200

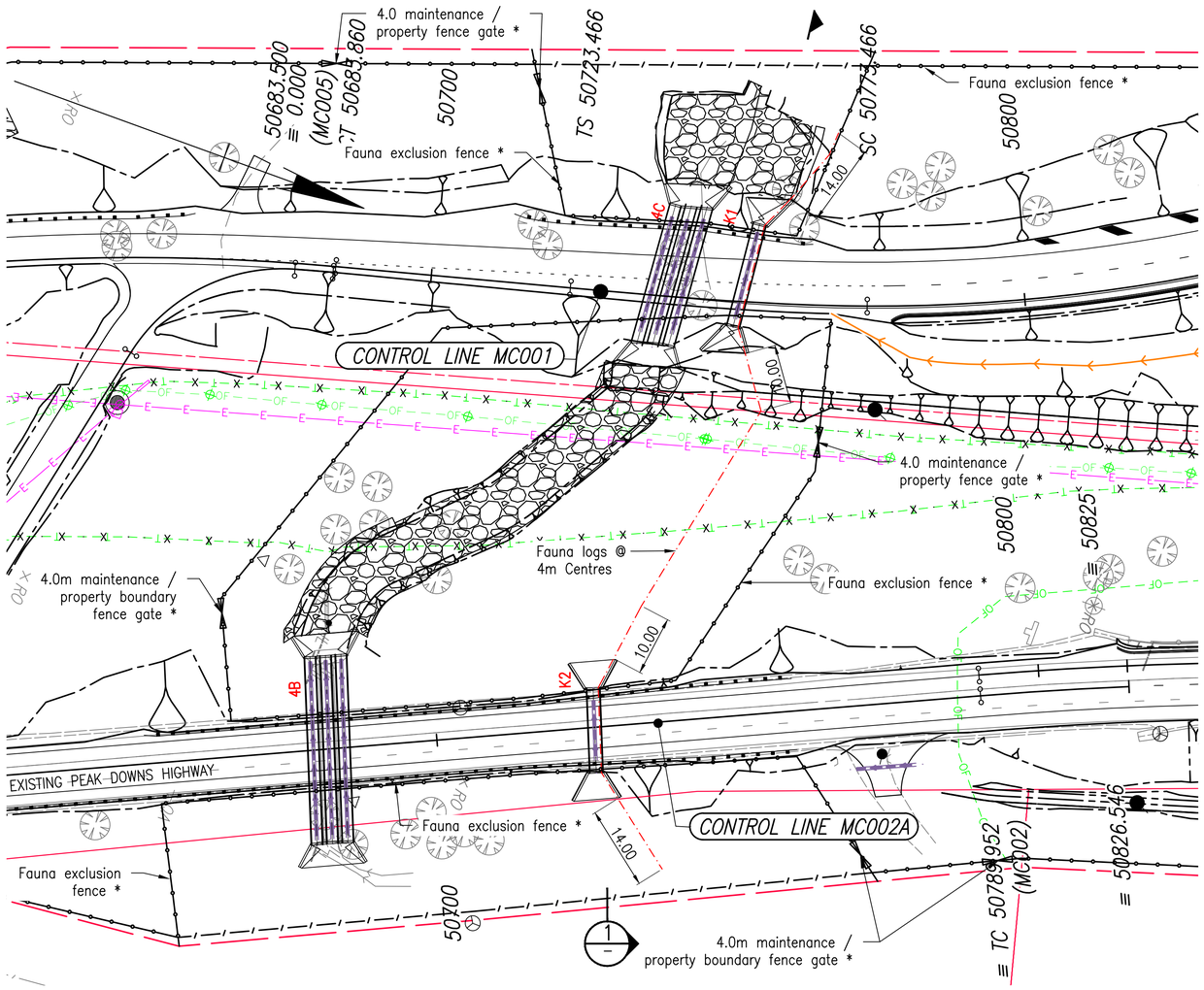

FAUNA CROSSING CULVERTS
SCALE 1:500

LEGEND

*	Refer RMS Std drg. MD.R201.D02.A
-·-·-	Fauna logs

NOTE:

1. For General Notes & Legend, refer Drg. No. 677589.
2. For fauna exclusion fence extents and gate locations refer 677589– 677601
3. For fauna exclusion fence setout refer drgs 677625–677637
4. For culvert cross sections refer drg 678092

3

3	Fauna crossing & fence added	–	21/9/15	
–				
	Revisions/Descriptions	Certification	Date	Microfiled

Last Modified :– Sep 22, 2015 – 9:09am

CAD FILES J:\60220975\5. CADD\5.3 Working\Drawings\Detailed Design\60220975–113005–678090–MD–05.dwg

Associated Job Nos	Survey Data	
	Datum	GDA94
Auxiliary Drg Nos 250282–250323	Horiz. Grid	MGA95 ZONE 55
	Height Origin	AHD PM38638
	Survey Books	MR93499

Scales
0 2 4 6 8m
0 5 10 15 20m

Dimensions shown in millimetres except where shown otherwise

MACKAY REGIONAL COUNCIL
PEAK DOWNS HIGHWAY (NEBO – MACKAY)
CTL CHGE 49420 – 53176 (MC001)

Reference Points

Preceding RP	Dist. to start of job (km)	From start to end of job	From end to Following RP	Following RP
33B/7	3.063	3.756	0.755	33B/7H

Through Chainage from NEBO – Int. Reynolds St & Cemetery Access Rd

MISCELLANEOUS DETAILS
SHEET 5 OF 6

Drawn DBW
Designed DRS

NOT TO BE USED FOR CONSTRUCTION
DRAWING IN PROGRESS DATE: 22/9/2015

Queensland Government

Job No.	242/33B/8
Contract. No.	MACD–1529
Drawing No.	678090 3
Series Number	MD–05 of 6

MRR_Detail (02/14)

NOT FOR CONSTRUCTION

AECOM

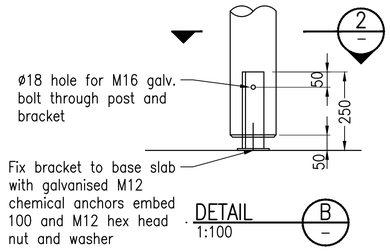

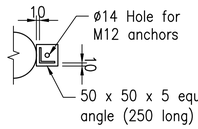

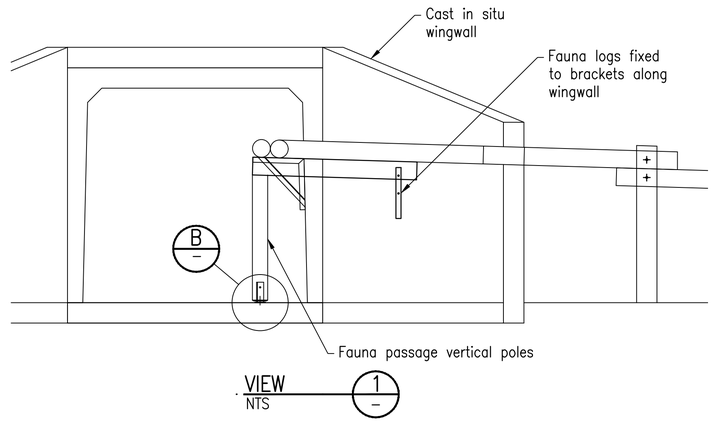

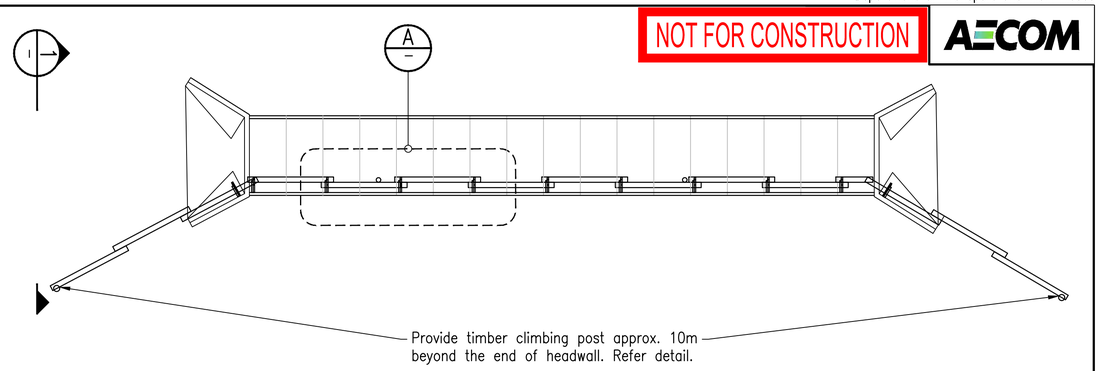

TYPICAL FAUNA PASSAGE CULVERT

SCALE: NTS

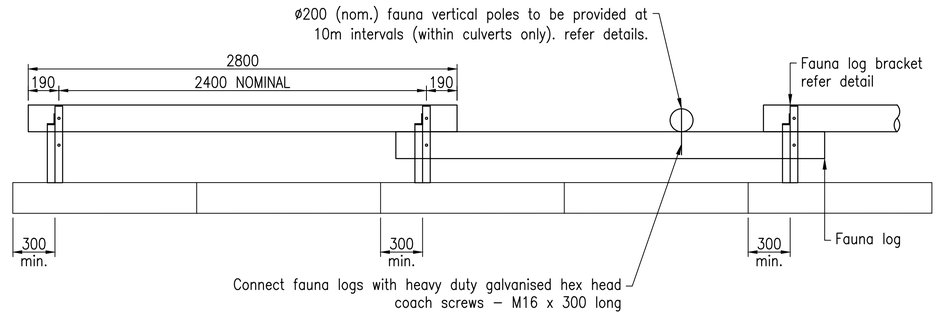

DETAIL A

NTS

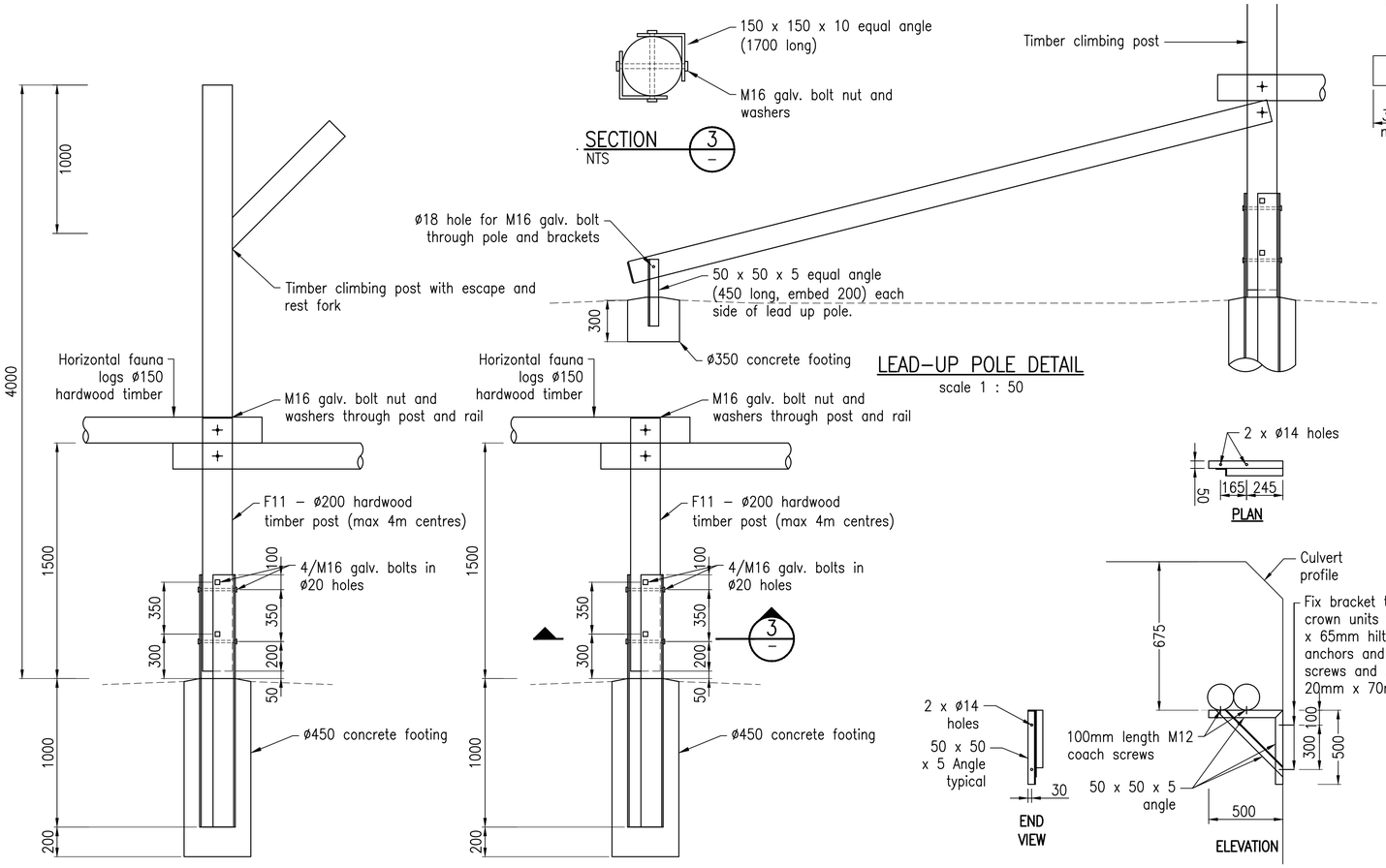

TIMBER CLIMBING POST DETAIL

scale 1 : 50

SUPPORT POST

scale 1 : 50

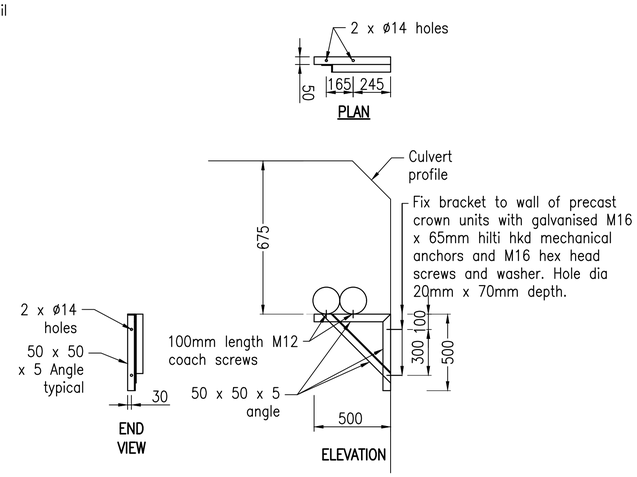

FAUNA LOG BRACKET DETAIL

scale: NTS

NOTES

1. REFER TO TMR STD DRAWINGS 1303, 1316, 1318 & 1359 FOR BOX CULVERT AND BASE SLAB INSTALLATION DETAILS.
2. VERTICAL POLE INSIDE THE BOX CULVERT TO BE INSTALLED AT 10m MAX.
3. ALL FIXINGS TO BE HEAVY DUTY GALVANISED.
   STEEL PLATES SHALL BE GRADE 250 TO AS/NZS 3678.
   STEEL SECTIONS SHALL BE GRADE 300 TO AS/NZS 3679.1.
   HEXAGON HEAD BOLTS, PRODUCT GRADE C, SHALL BE PROPERTY CLASS 4.6 TO AS 1111.1.
   HEXAGON NUTS, PRODUCT GRADE B, SHALL BE PROPERTY CLASS 5 TO AS 1112.3.
   HEXAGON THIN NUTS, PRODUCT GRADE B, SHALL BE PROPERTY CLASS 04 TO AS 1112.4.
4. BOLTING CATEGORY FOR PRODUCT GRADE C BOLTS SHALL BE 4.6/S IN ACCORDANCE WITH AS 5100.6.
5. ALL WELDING TO MRTS 78.
6. THE WELD CATEGORY SHALL BE IN ACCORDANCE WITH AS/NZS 1554.1 IF NO OTHER CATEGORY SPECIFIED. WELDING SYMBOLS COMPLY WITH AS1101.3.
7. EDGES TO BE PROTECTIVE TREATED SHALL BE ROUNDED TO A RADIUS OF 1.5mm UNO.
8. ALL COMPONENTS EXCEPT STAINLESS STEEL ITEMS SHALL BE HOT-DIP GALVANISED AFTER FABRICATION.
9. BOLTS, NUTS AND WASHERS SHALL BE HOT-DIP GALVANISED IN ACCORDANCE WITH AS 1214.
10. SURVEY SETOUT STRINGS FOR FAUNA PASSAGE BETWEEN CULVERTS WILL BE AVAILABLE ON REQUEST.
11. HARDWOOD TIMBER FROM SITE CAN BE USED FOR HORIZONTAL FAUNA LOGS. MILLED TIMBER WHICH HAS BEEN CHEMICALLY PROTECTED IS REQUIRED FOR VERTICAL POLES.

3

	Revisions/Descriptions	Certification	Date	Microfiled
3	Fauna crossing & fence added	–	21/9/15	
–				

Associated Job Nos

Auxiliary Drg Nos 250282–250323

Survey Data	
Datum	GDA94
Horiz. Grid	MGA95 ZONE 55
Height Origin	AHD PM38638
Survey Books	MR93499

Scales: 0 1000 2000mm; 0 1 2 3 4m

Dimensions shown in millimetres except where shown otherwise

MACKAY REGIONAL COUNCIL

PEAK DOWNS HIGHWAY (NEBO – MACKAY)

CTL CHGE 49420 – 53176 (MC001)

Reference Points

Preceding RP	Dist. to start of job (km)	From start to end of job	From end to Following RP	Following RP
33B/7	3.063	3.756	0.755	33B/7H

Through Chainage from NEBO – Int. Reynolds St & Cemetery Access Rd

MISCELLANEOUS DETAILS
SHEET 6 OF 6

Drawn DBW

Designed DRS

NOT TO BE USED FOR CONSTRUCTION

DRAWING IN PROGRESS DATE: 22/9/2015

Queensland Government

Job No.	242/33B/8
Contract. No.	MACD-1529
Drawing No.	678091 3
Series Number	MD-06 of 6

MRR_Detail (02/14)

CAD FILES J:\60220975\5. CADD\5.3 Working\Drawings\Detailed Design\60220975-113006-678091-MD-06.dwg

Last Modified :- Sep 22, 2015 - 9:08am

Appendix C: Project Clearing Limits

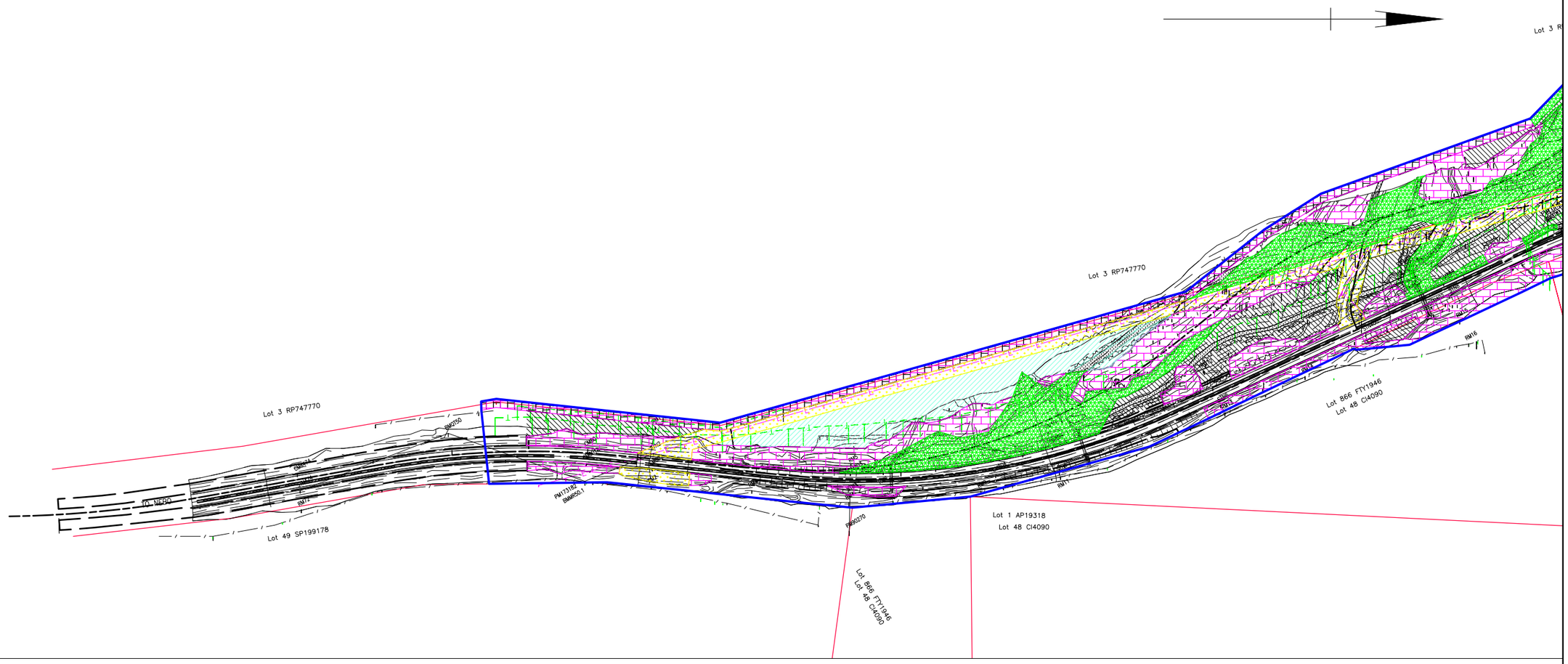

LEGEND

- AREA NOT TO BE CLEARED
- ERRP CLEARING WORKS COMPLETED (2012 & 2014 WORKS) (Approx Area = 95185m^2)
- TEMPORY LAYDOWN CLEARING (2014 WORKS) (Approx Area = 17046m^2)
- POTENTIAL CLEARING (HABITAT ASSESSMENT) (Approx Area = 24654m^2)
- ERRP CLEARING WORKS TO BE COMPLETED (Approx Area = 149687m^2)
- CLEARED AREAS – TEMPORARY LAYDOWN, GEOTECHNICAL & SURVEY ACCESS, REE TRIALS (2015 WORKS) (Approx Area = 15045m^2)
- PREVIOUSLY CLEARED AREAS NOT ASSOCIATED WITH ERRP (Approx Area = 40045m^2)
- SPECIAL STAGED CLEARING AND GRUBBING. FOR SLOPE MANAGEMENT TO BE COMPLETED (Approx Area = 14204m^2)
- ETON RANGE REALIGNMENT PROJECT FOOTPRINT (Approx Area = 594602m^2)

Queensland Government

ETON RANGE REALIGNMENT PROJECT

CLEARANCE PLANS – EPBC REFERRAL (SHEET 1 OF 2)

Scale 0 20 40 60 80m

ERRP–SK–001

18/08/2015

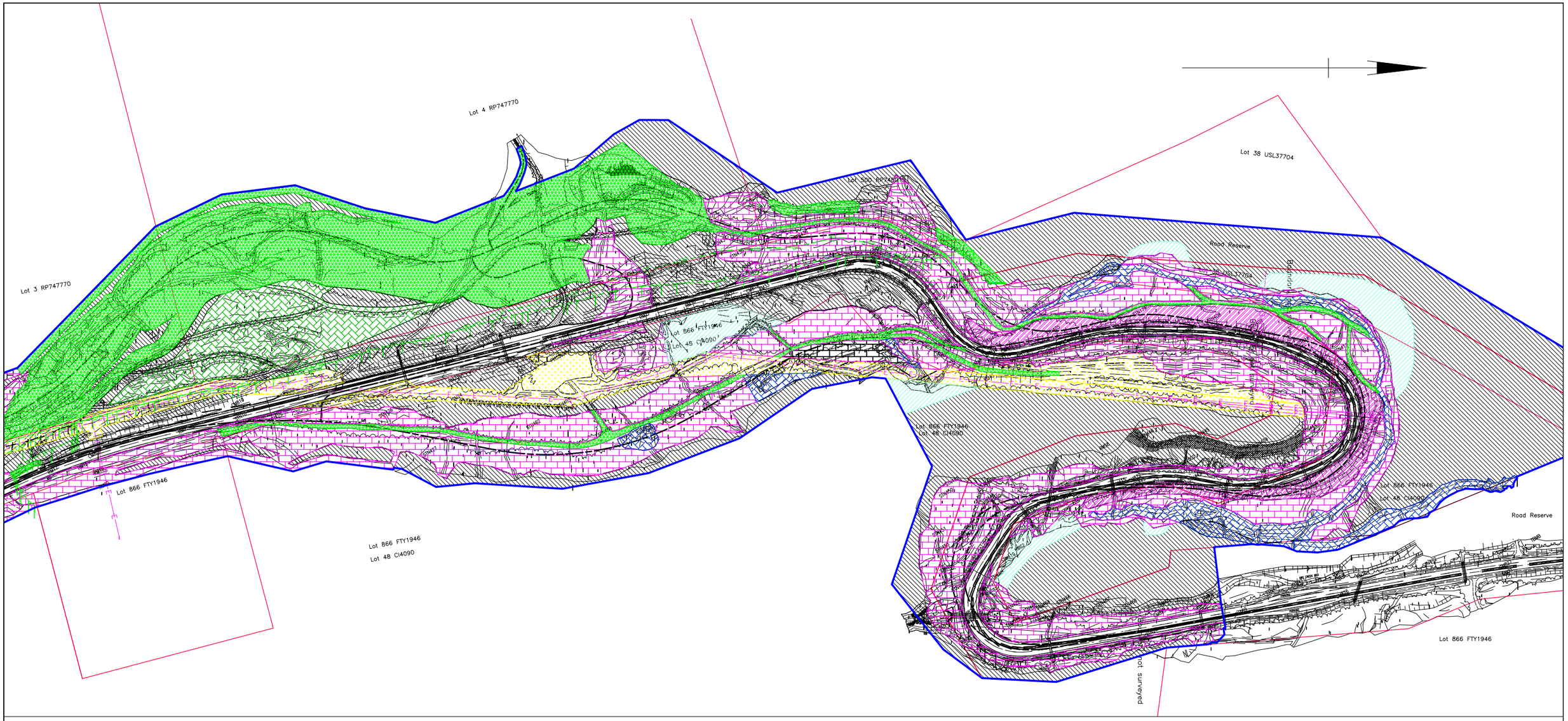

Queensland Government

ETON RANGE REALIGNMENT PROJECT

CLEARANCE PLANS – EPBC REFERRAL (SHEET 2 OF 2)

Scale 0 20 40 60 80m

ERRP–SK–002

18/08/2015