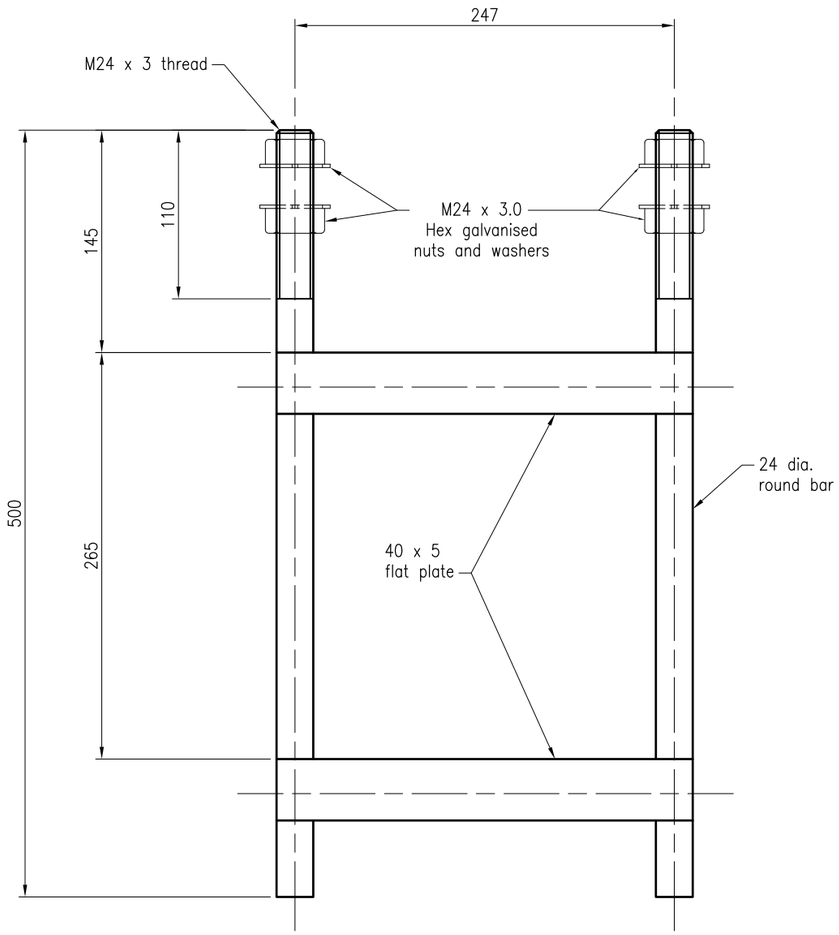

ELEVATION

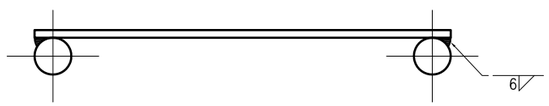

PLAN

RAGBOLT SUB ASSEMBLY (2 OFF)

Assemblies to be supplied complete
with 8 x hex. galv. nuts and washers

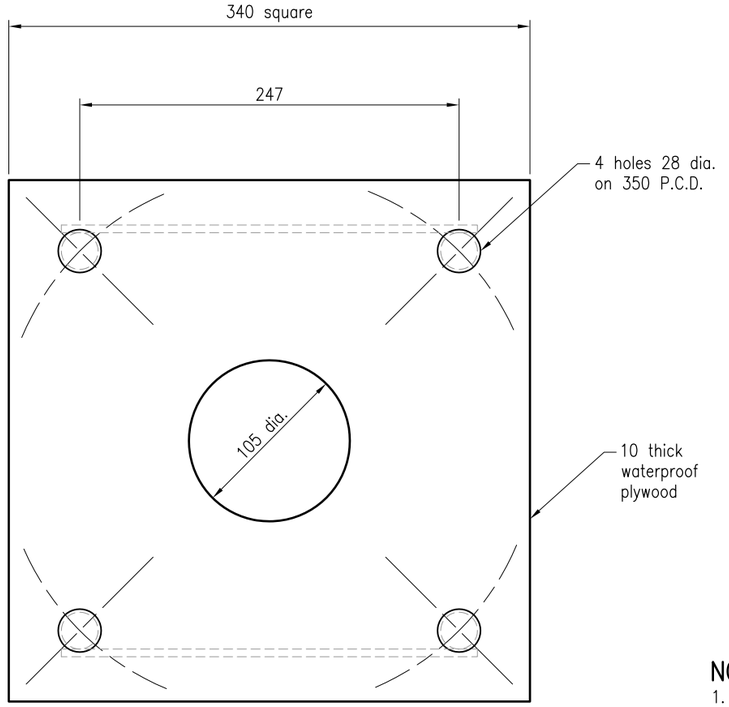

RAGBOLT TEMPLATE (1 OFF)

INSTALLATION OF CONDUITS AND PITS IS THE RESPONSIBILITY OF THE LICENSED ELECTRICAL CONTRACTOR

NOTES:

1. Round bar to AS/NZS 3679.1.
2. Flat plate to AS/NZS 3678.
3. Welding Symbols to AS 1101.3.
4. All welding in accordance with AS/NZS 1554.1.
5. All steelwork to be cleaned and welding slag removed prior to hot dip galvanising to AS 1214.
6. All nuts to be grade 5 to AS 1112.2 and hot dip galvanised to AS 1214.
7. All washers grade 4.6 to be hot dip galvanised to AS/NZS 4680.
8. All dimensions are in millimetres unless shown otherwise.

ASSOCIATED DEPARTMENTAL DOCUMENTS:
Standard Drawings Roads Manual
Main Roads Specifications and Technical Standards Manual

REFERENCED DOCUMENTS:
Departmental Standard Specifications:
MRTS92 Traffic Signal and Road Lighting Footings

Australian Standards:

AS 1101.3	Graphic Symbols for General Engineering – Welding and Non–destructive Examination
AS 1112.2	ISO Metric Hexagon Nuts – Style 2 – Product Grades A and B
AS 1214	Hot–dip Galvanized Coatings on Threaded Fasteners (ISO Metric Coarse Thread Series)
AS/NZS 1554.1	Structural Steel Welding – Welding of Steel Structures
AS/NZS 3678	Structural Steel – Hot–rolled Plates, Floorplates and Slabs
AS/NZS 3679.1	Structural Steel – Hot–rolled Bars and Sections
AS/NZS 4680	Hot–dip Galvanized (Zinc) Coatings on Fabricated Ferrous Articles

Department of Transport and Main Roads

TRAFFIC SIGNALS

RAGBOLT SUB–ASSEMBLY
FABRICATION DETAILS

Queensland Government

© The State of Queensland (Department of Transport and Main Roads) 2014
http://creativecommons.org/licences/by/3.0/au

A3
Not to Scale

Standard Drawing No
1422
Date 1/14

B C D E