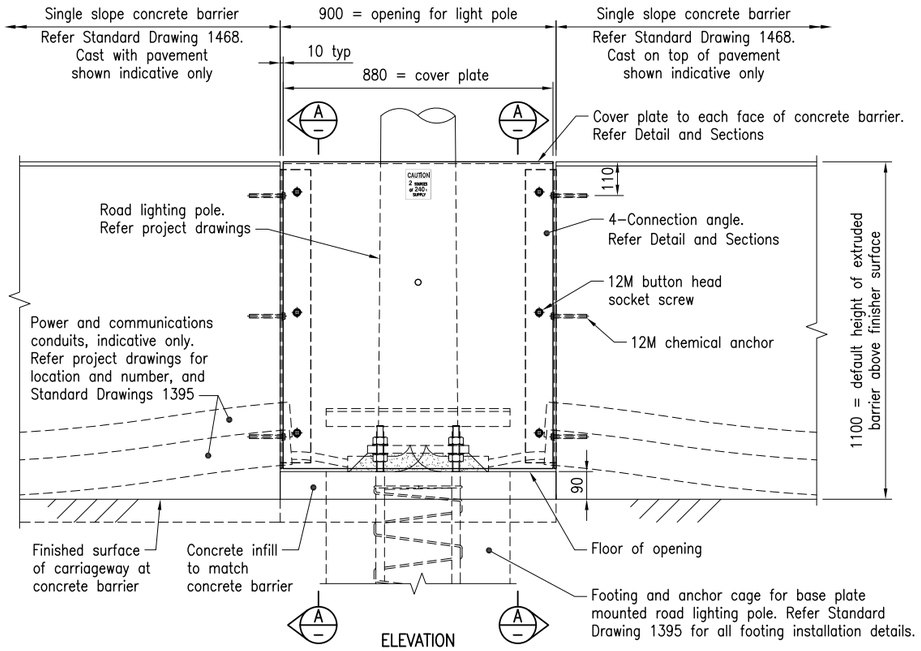

COVER ASSEMBLY

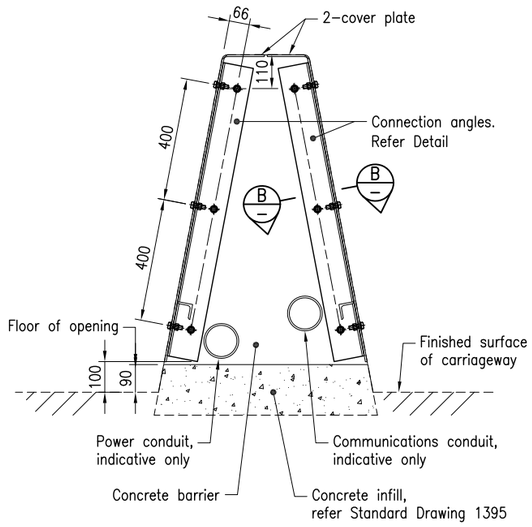

SECTION A TYPICAL DETAILS AT OPENING IN CONCRETE BARRIER, 1100 DEFAULT HEIGHT. BARRIER AT SPLIT CARRIAGEWAY SIMILAR

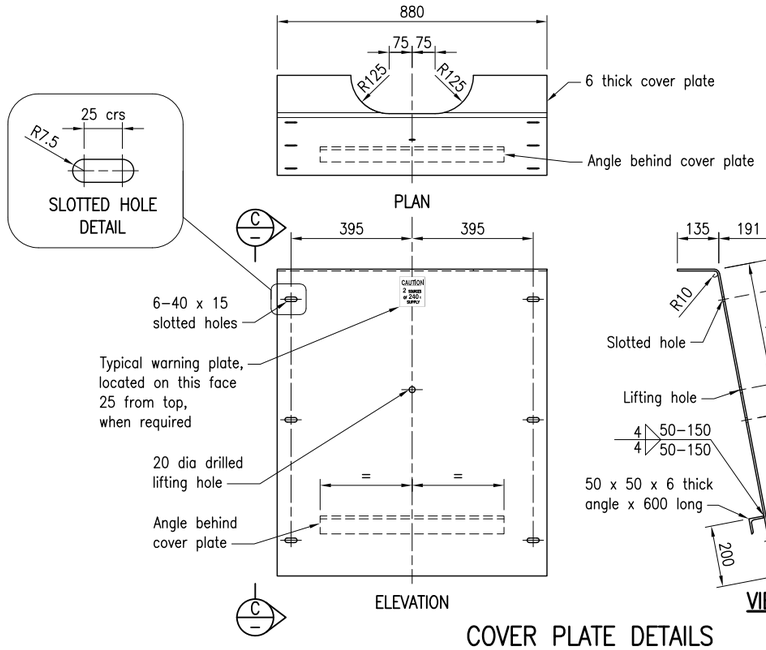

COVER PLATE DETAILS

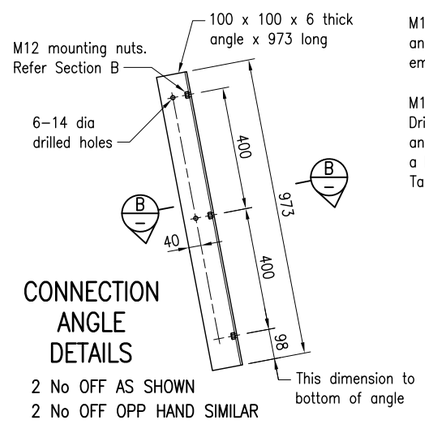

CONNECTION ANGLE DETAILS

2 No OFF AS SHOWN
2 No OFF OPP HAND SIMILAR

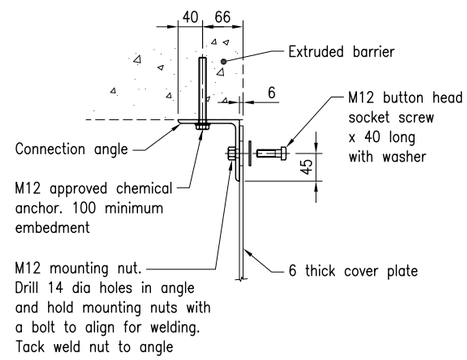

SECTION B TYPICAL CONNECTION DETAILS

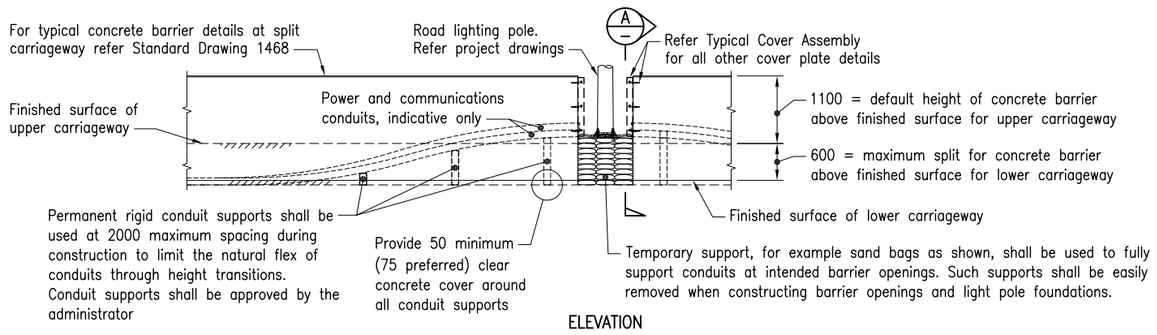

TYPICAL DETAILS AT OPENING FOR LIGHT POLE IN BARRIER OF SPLIT CARRIAGEWAY

NOTES:

1. SCOPE: This Standard Drawing provides typical assembly, fabrication and connection details of the cover plate used with road lighting poles within concrete barrier.
   Refer Standard Drawing 1395 for anchor cage and footing installation details, and for conduit details at the opening for light pole.
   Refer Standard Drawing 1468 for typical concrete barrier details.
2. The centreline of the barrier and the centre of the light poles shall not be misaligned by more than ±5mm at top of barrier to ensure the fit of the cover plates.
3. Barrier ends at light pole openings shall be finished normal to the longitudinal grade of the pavement, so that cover plates can be fabricated and fitted square to the barrier.
4. Cover plates shall be bent from one plate, with the top angle rounded to match the 15mm chamfer on the barrier.
   Warning signage shall be provided as shown when required.
5. Measurements at the opening shall be checked for each individual site, prior to fabrication of the steel cover plates and angles.
6. STEELWORK shall be fabricated to the requirements of MRTS78 and in accordance with AS 4100.
   Steel plate and angle Grade 250 to AS/NZS 3678.
   All holes shall be drilled or laser cut, ground smooth around edges.
   Bolts Class 4.6 to AS 1111.1, nuts Class 5 to AS 1112.1, and washers to AS1237.
   All bolts and nuts shall be hot dip galvanised to AS 1214.
   All other steelwork shall be hot dip galvanised to AS/NZS 4680.
   All welds shall be completed prior to hot dip galvanising.
   Sharp edges, burrs, slag and weld splatter shall be removed prior to galvanising.
7. CHEMICAL ANCHORS for fixing to concrete shall be TMR approved and shall be installed to manufacturer's recommendations.
8. WELDING symbols conform to AS 1101.3.
   All welding except tack welds shall be SP category to AS/NZS 1554.1.
   Tack welding for location purposes shall be to AS/NZS 1554.3.
   Welding consumables shall be controlled hydrogen type:
   G493 to AS/NZS ISO 14341–B or T493 to AS/NZS ISO 17632–B.
9. Cover assembly for conduit road crossing only shall be as detailed on this drawing except that the cutout is to be omitted.
10. Dimensions are in millimetres.

REFERENCED DOCUMENTS:

Departmental Standard Drawings:

1395 Road Lighting – Footing and Installation Details for Base Plate Mounted Pole in Concrete Barrier

1468 Single Slope Concrete Barrier – Extruded Concrete Barrier – Barrier, Reinforcing and Expansion Joint Details

Departmental Specifications:

MRTS94 Road Lighting

MRTS78 Fabrication of Structural Steelwork

Department of Transport and Main Roads	Queensland Government	© The State of Queensland (Department of Transport and Main Roads) 2021 https://creativecommons.org/licenses/by/4.0/
SINGLE SLOPE CONCRETE BARRIER		
FABRICATION AND INSTALLATION DETAILS FOR COVER PLATES AT ROAD LIGHTING POLES IN CONCRETE BARRIERS	A3 Not to Scale	Standard Drawing No 1469 Date 3/2021
	A B C D E	