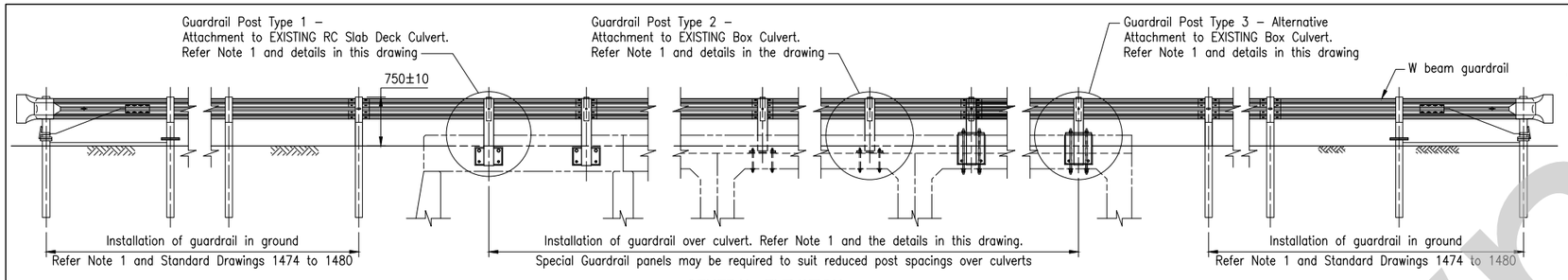

GENERAL ELEVATION

- ◒ Tack welding to threaded bar is not permitted.
- ┼ SHS posts shall be cut to length and installed such that 750±10 height is provided to finished surface.
- ✠ Maximum depth of cover over culverts shall be 600.
- ✳ Guardrail spacing behind kerb 200 desirable, 300 maximum.

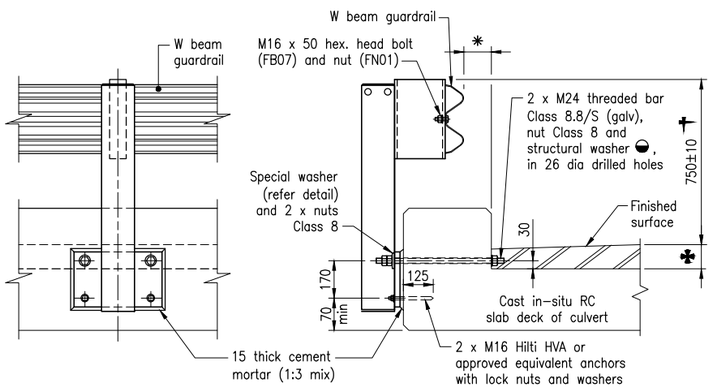

ELEVATION SECTIONAL END VIEW

GUARDRAIL POST TYPE 1 – ATTACHMENT TO RC SLAB DECK CULVERT

Square and Skewed Culverts

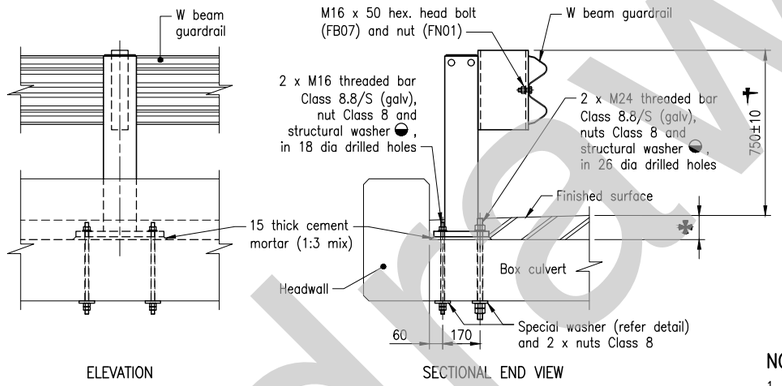

ELEVATION SECTIONAL END VIEW

GUARDRAIL POST TYPE 2 – ATTACHMENT TO BOX CULVERT WITH HEADWALLS

Square and Skewed Culverts

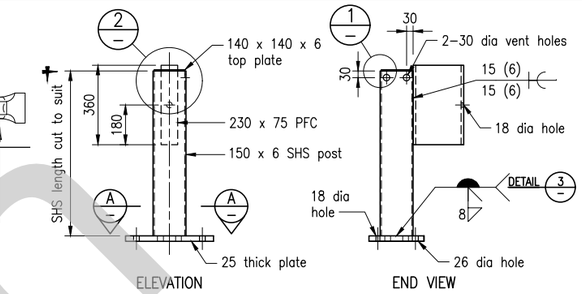

GUARDRAIL POST TYPE 2 – FABRICATION DETAILS

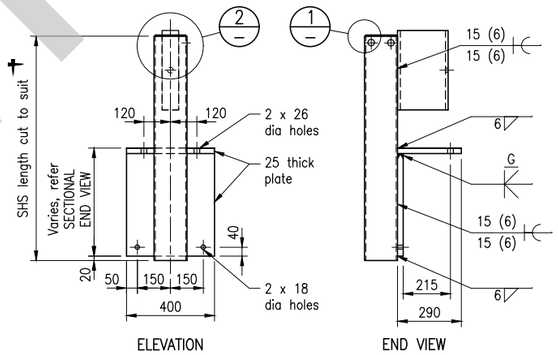

GUARDRAIL POST TYPE 3 – FABRICATION DETAILS

Refer Guardrail Post Type 2 for all other fabrication details

NOTES:

1. BARRIER SELECTION CRITERIA: For W beam rail barrier approaching or traversing over culverts, a suitable road safety barrier design solution shall be adopted after the design in SD1474 (that is, 1.0m long posts and 1.0m minimum offset to hinge point) has been deemed impossible.
   Suitable solutions that may then be investigated in conjunction with the Road Planning and Design Manual are in the following order of preference: (i) Option 1, then 2, then 3 in SD1474, and then (ii) Options 4, then 5 then 6 in SD1490, and then (iii) Post Type 1, then 2, then 3 in this drawing.
   The Post Type 1, 2 and 3 detailed in this drawing are for attachment to EXISTING culverts where depth of cover is 600mm maximum.
   The design decisions leading to the adoption of a suitable solution shall be fully documented, including reasons why the preferred options listed previously have not been adopted.
2. THE GUARDRAIL shown in this drawing shall be in accordance with MRTS14.
3. STEELWORK shall be fabricated to the requirements of MRTS78.
   SHS Grade C450L0 to AS/NZS 1163. PFC Grade 300 to AS/NZS 3679.1.
   Steel plate Grade 350 to AS/NZS 3678.
   Bolts Class 8.8, nuts Class 8 and washers for Class 8.8 bolts to AS/NZS 1252. All lock nuts shall be Hex nuts Class 5 to AS 1112. All bolts, threaded bar and nuts shall be hot dip galvanized to AS 1214. All other steelwork shall be hot dip galvanized to AS/NZS 4680 unless shown otherwise.
   Prior to galvanizing all weld splatter and welding slag shall be
4. WELDING symbols shall conform to AS 1101.3. All welding shal
   All welds except location tack welds shall be SP category.
   Welding consumables shall be controlled hydrogen type:
   for SHS G493 to AS/NZS ISO 14341–B or T493 to AS/NZS I
   for all other steelwork G49X to AS/NZS ISO 14341 or T49X t
5. All dimensions shall be verified on site prior to commencemen
6. All dimensions are in millimetres.

REFERENCED DOCUMENTS:

Departmental Standard Drawings:

1474 Steel Beam Guardrail – Installation and Setout

1490 Steel Beam Guardrail – Details for Installation of guardrail over Culverts where Depth of Cover is less than 1100

Departmental Specifications:

MRTS14 Road Furniture

MRTS78 Fabrication of Structural Steelwork

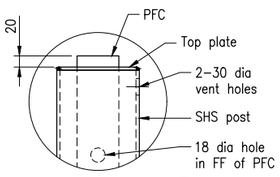

DETAIL 2

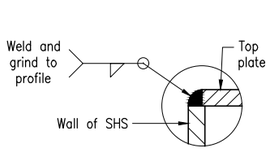

DETAIL 1

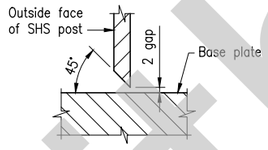

DETAIL 3 WELD PREPARATION FOR SHS POST TO BASE PLATE

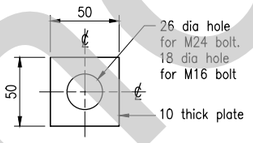

SPECIAL WASHER DETAIL

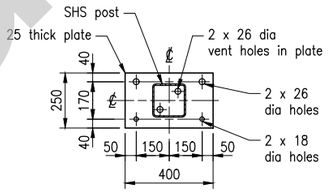

SECTION A BASE PLATE

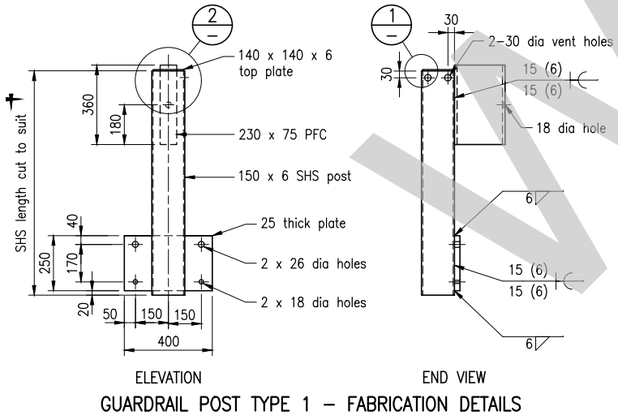

GUARDRAIL POST TYPE 1 – FABRICATION DETAILS

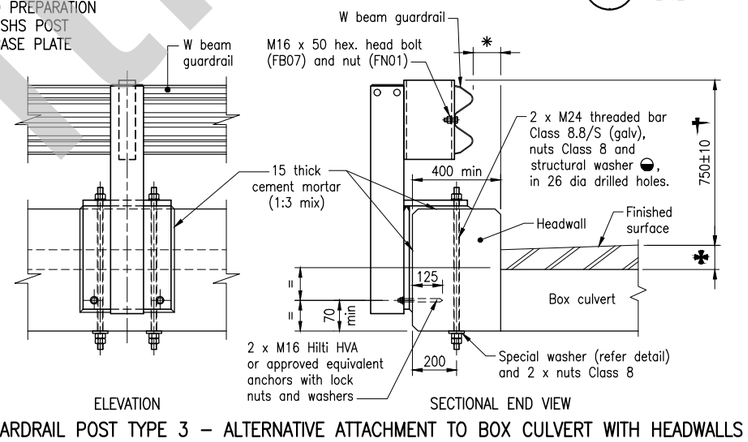

ELEVATION SECTIONAL END VIEW

GUARDRAIL POST TYPE 3 – ALTERNATIVE ATTACHMENT TO BOX CULVERT WITH HEADWALLS

This option only to be used with fully reinforced headwall, that is integrated with the deck slab

SQUARE CULVERTS ONLY

This Standard Drawing is withdrawn. Public domain steel barrier systems are not to be used as Normal Design Domain (NDD) for new projects or installations within the TMR network. However, this drawing can be used for the purposes of maintaining existing installations when repairs and replacements can be reasonably and readily undertaken or if justified and certified by an RPEQ as an Extended Design Domain (EDD) for new installations, where appropriate proprietary products are not suitable/feasible.

Updated Guidance stamp 3/2025

The
is t
The
deta
desi
The
loca
project specific drawings.

Withdrawn

Department of Transport and Main Roads

STEEL BEAM GUARDRAIL

GUARDRAIL ATTACHMENTS TO EXISTING BOX CULVERTS – ASSEMBLY AND FABRICATION DETAILS

Queensland Government

© The State of Queensland (Department of Transport and Main Roads) 2018
http://creativecommons.org/licences/by/3.0/au

A3 | Not to Scale | Standard Drawing No 1491 | Date 7/18 3/2025

A B C D